YAMAHA

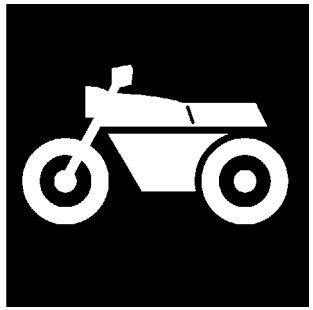

CATALOGO DE REPUESTOS

TDM900A (2B04) EUROPE
TDM900A (2B05) EUROPE

1G2B0-352S1

(2G2B0-352S1)

YAMAHA GENUINE Parts & Accessories

A2

TDM900A
CATALOGO DE REPUESTOS
©2007 por Yamaha Motor Co., Ltd.
1ª edición, noviembre 2007
Todos los derechos reservados.
Toda reproducción o uso no autorizado
sin el consentimiento escrito de
Yamaha Motor Co., Ltd.
quedan expresamente prohibidos

A3

PROLOGO

Este catálogo de repuestos corresponde a las piezas para el o los modelos que figuran en la página de portada. Al formular el pedido de repuestos, se ruega citar este catálogo y especificar correctamente el número y el nombre de las piezas.

1. Las modificaciones y agregados que se hayan realizado después de la edición de este Catálogo de Repuestos, serán anunciados en las Informaciones de Recambios.
   Es recomendable que se hagan las correcciones necesarias en el Catálogo de Repuestos de acuerdo con las Informaciones de Recambios.

2. Abreviaciones
   En este. Catálogo de Repuestos se emplean las siguientes abreviaciones.

   "UR" Usar el número de partes especificado
   "UN" Usar la cantidad necesaria
   "AP" Piezas sustitutivas
   "LM" Fabricación local (Hay que pedir los repuestos en las cercanías)
   "F#" Nº de bastidor (Nº aplicable a la máquina)
   "O/S" Sobredimensionado

3. La cantidad de componentes para el montaje
   - Los componentes, suministrados como conjunto, se describen con un punto (.) que precede al nombre del parte como se indica a continuación.
   - La numeración que aparece a la derecha de cada descripción indica la cantidad de partes por cada unidad de conjunto.

CODIGO Nº	DESCRIPCION	CANT.	OBSERVACIONES
2F5–83310–60	ENSAMBLAJE DE LA LUZ	2	
115–83311–60	.BOMBILLA (6V–18W)	1	

4. Los colores de los componentes se indican como sigue en la columna de "OBSERVACIONES".

CODIGO Nº	DESCRIPCION	CANT.	OBSERVACIONES
2N4–24110–00–X5	COMP. DEL TANQUE	2	MXR
3J1–24240–10	.GRAFICO, DEL TANQUE	1	PARA MXR

5. Debe tenerse en cuenta que las ilustraciones sirven como guia para la búsqueda de los números de partes y no deben usarse para el montaje. Durante el montaje, se recomienda usar el manual de taller correspondiente.

6. EL asterisco (*) antes del número de referencia indica los elementos modificados después de la primera edición.

7. Números de serie

Nº de Serie del motor

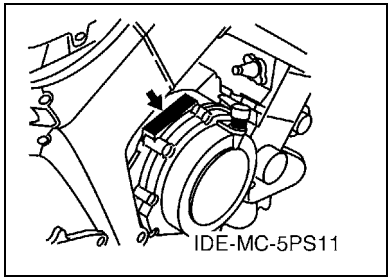

Nº de Serie del bastidor

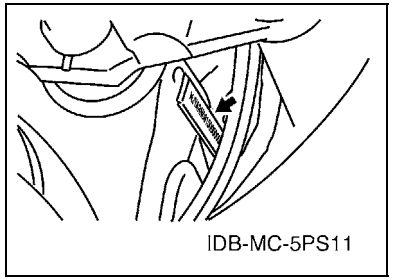

8. Códigos de color aplicables (El símbolo (*) muestra el color de modelo.)

Abreviatura	Nombre de color	Código de color
DRMK(*)	DEEP RED METALLIC K	0918
LGB	LOW GLOSS BLACK	0098
MBM3	MAT BLUE METALLIC 3	0960
S3(*)	SILVER 3	0791
SMX(*)	BLACK METALLIC X	0903

ROTULO DE MODELO

(1) El rótulo llamada "Rótulo de Modelo" está en la ubicación indicada abajo en el (3). Cuando se utilice este catálogo de repuestos, se ruega cotejar entre el "código de modelo–número de código de producción" del catálogo y el "código de modelo–número de código de producción" indicado en el Rótulo de Modelo fijado en el producto correspondiente.

(2) Indicación del "Rótulo de Modelo"

a b
○ xxxx – xxx
● x c

a: Código de tipo de Modelo
b: Número de código de Producción
c: Tipo de color

○ 4TW1–010
● A

(3) Ubicación de fijación del Rótulo de Modelo

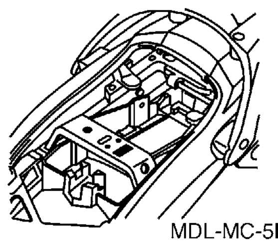

MDL-MC-5PS11

(4) Información de Color

Código de Modelo	Código de tipo de color	Código de color	Nombre de color	Abreviatura
2B04	A	0903	BLACK METALLIC X	SMX
	B	0918	DEEP RED METALLIC K	DRMK
2B05	A	0791	SILVER 3	S3

(5) Código de Modelo–Número de código de Producción del Modelo Listado en este Catálogo de Repuestos

Código de Modelo	Número de Código de Producción	País (destino)
2B04	010	EUROPE
2B05	010	EUROPE

Código de Modelo	Número de Código de Producción	País (destino)

CONTENIDO

MOTOR

CULATA DE CILINDRO B2
CILINDRO B4
CIGUENAL & PISTON B5
VALVULA B6
ARBOL DE LEVAS & CADENA B8
BOMBA DE AGUA B9
RADIADOR & MANGUERA B10
BOMBA DE ACEITE B12
ADMISION B15
ADMISION 2 ..... C3
DESCARGA C5
CARTER C6
CUBIERTA DE CARTER 1 ..... C8
EMBRAGUE DEL ARRANQUE C10
EMBRAGUE C11
TRANSMISION C13
LEVA DE CAMBIO & HORQUILLA C15
EJE DE CAMBIO & PEDAL D2

SHASIS

CUADRO D3
GUARDABARRO D5
CUBIERTA LATERAL D8
BRAZO TRASERO D9
SUSPENSION TRASERO D11
DIRECCION D12
HORQUILLA DELANTERA D13
DEPOSITO DE COMBUSTIBLE D15
ASIENTO E3
RUEDA DELANTERA E4
CALIBRE FRENO DELANTERA E5
RUEDA TRASERA E6
CALIBRE FRENO TRASERA E8
MANILLAR & CABLE E9
CILINDRO MAESTRO DELANTERO E10
SOPORTE & APOYAPIE E12
CILINDRO MAESTRO TRASERO E14
BOVEDA 1 ..... F2
GENERADOR F6
MOTOR DE ARRANQUE F7
LUZ DE DESTELLADOR F8
MEDIDOR F9
FARO DELANTERO F10
LUZ DE COLA F11
INTERRUPTOR DE MANILLAR&PALANC F12
EQUIPO ELECTRICO 1 ..... F13
EQUIPO ELECTRICO 2 ..... F15
EQUIPO ELECTRICO 3 ..... G3

INDICE

INDICE NUMERICO M1

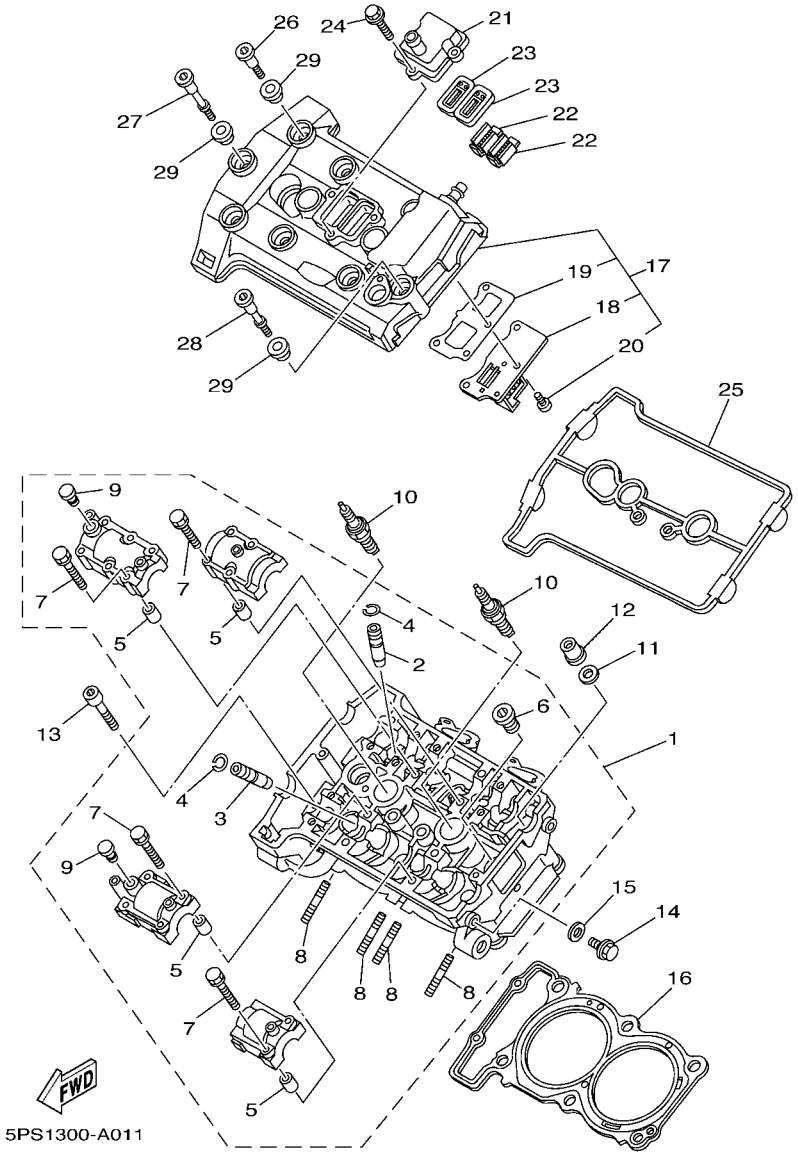

FIG. 1 CULATA DE CILINDRO

REF. Nº	CODIGO Nº	DESCRIPCION	2B04	2B05				OBSERVACIONES
1	5PS–11101–10	CULATA DE CILINDRO COMPLETA	1					
	5PS–11101–00	CULATA DE CILINDRO COMPLETA		1				
2	3LD–11133–10	.GUIA DE VALVULA 1	6	6				
3	3LD–11134–10	.GUIA DE VALVULA 2	4	4				
4	93440–10109	.SEGURO	10	10				
5	91808–16023	.PASADOR DE CLAVIJA	8	8				
6	90340–18101	.TORNILLO, DE DRENAJE	2	2				
7	90105–06153	.TORNILLO	16	16				
8	95617–08625	.PERNO DE PUNTAL	4	4				
9	90338–10150	.TAPON	2	2				
10	94701–00241	BUJIA (NGK DPR8EA-9)	2	2				UR
	94701–00242	BUJIA (ND X24EPR-U9)	2	2				UR
11	90201–103M4	ARANDELA PLANA	6	6				
12	90179–10414	TUERCA	6	6				
13	91317–06150	PERNO	2	2				
14	95024–08012	PERNO, DE BRIDA	1	1				
15	90430–08119	JUNTA	1	1				
16	5PS–11181–00	JUNTA, DE CULATA 1	1	1				
17	5PS–11190–10	TAPA CULATA DE CILINDRO 1	1					
	5PS–11190–00	TAPA CULATA DE CILINDRO 1		1				
18	5PS–11165–00	.PLACA RESPIRADERO	1	1				
19	5PS–11169–00	.EMAPQ CBTA.DE RESP.	1	1				
20	90149–05009	.TORNILLO DE REGLAJE	3	3				
21	5PS–14899–00	TAPA, DE CAJA	1	1				
22	5PS–1482K–00	PLACA	2	2				
23	5PS–14890–00	VALVULA DE LAMINAS COMPLETA	2	2				
24	95027–06020	PERNO, DE BRIDA	3	3				

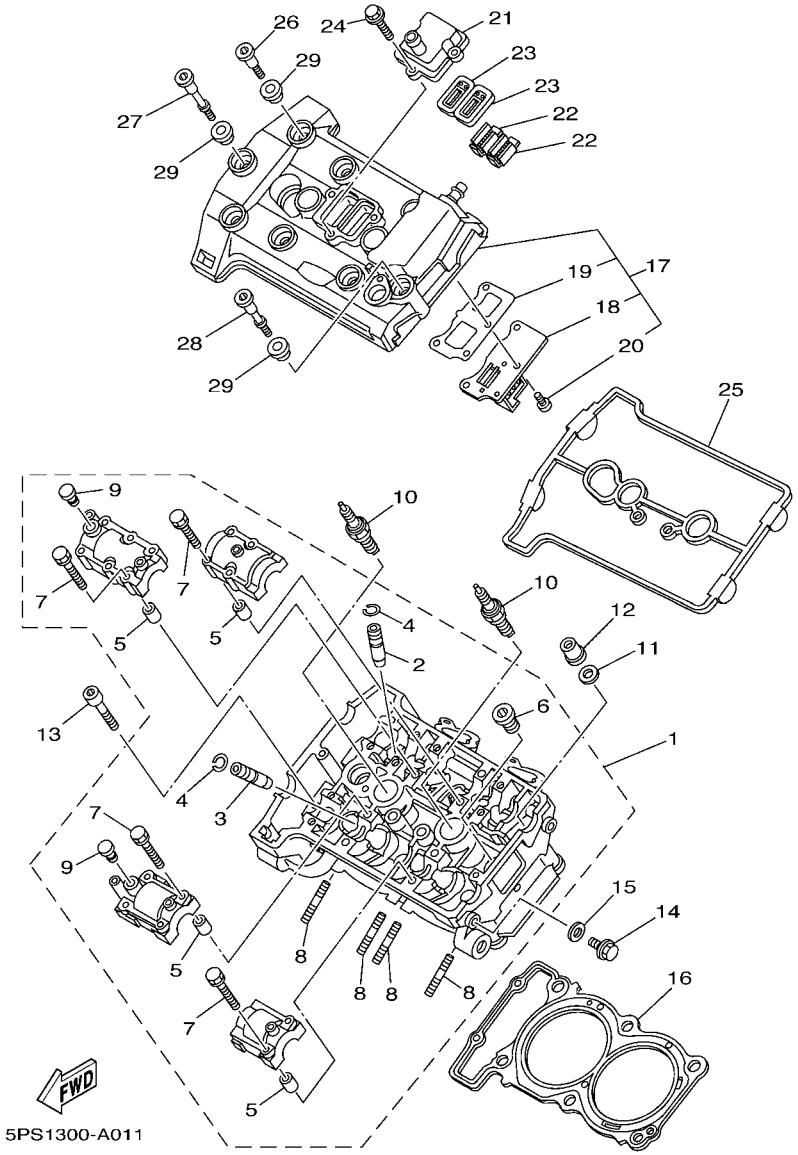

FIG. 1 CULATA DE CILINDRO

REF. Nº	CODIGO Nº	DESCRIPCION	2B04	2B05				OBSERVACIONES
25	5PS–11193–00	EMPAQUE	1	1				
26	90109–066F0	PERNO	6	6				
27	90109–06044	PERNO	1	1				
28	90109–06045	PERNO	1	1				
29	4KG–1111G–00	CASQUILLO DE GOMA	8	8				

FIG. 2 CILINDRO

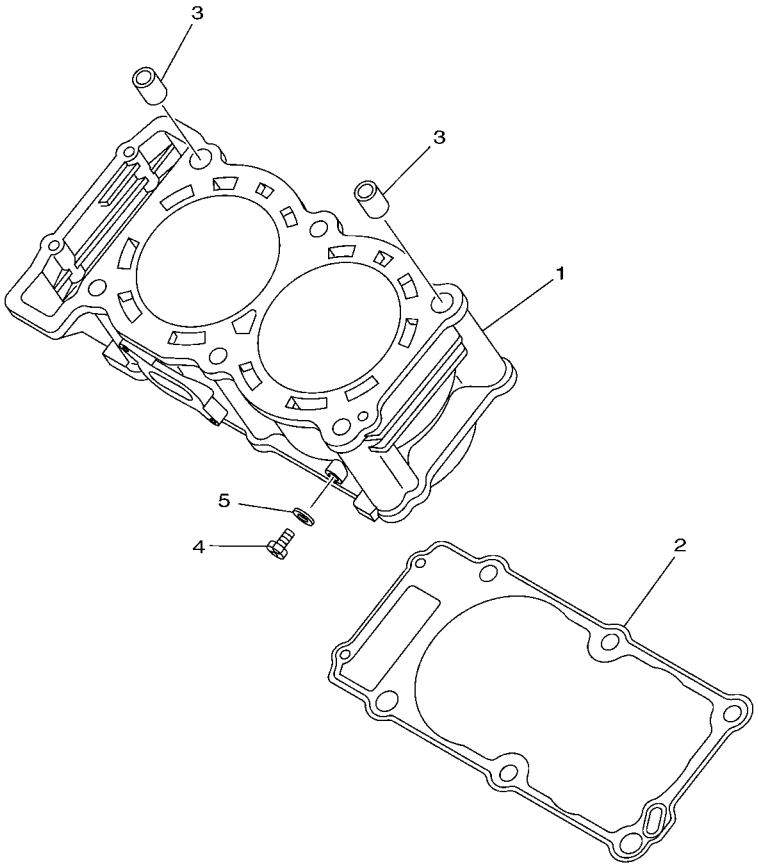

5PS1300-A021

REF. Nº	CODIGO Nº	DESCRIPCION	2B04	2B05				OBSERVACIONES
1	5PS–11311–10	CILINDRO 1	1					
	5PS–11311–00	CILINDRO 1		1				
2	5PS–11351–00	JUNTA, DE CILINDRO	1	1				
3	99530–14016	PASADOR, DE ESPIGA	2	2				
4	90153–06029	TORNILLO HEXAGONAL	1	1				
5	90430–06014	JUNTA	1	1				

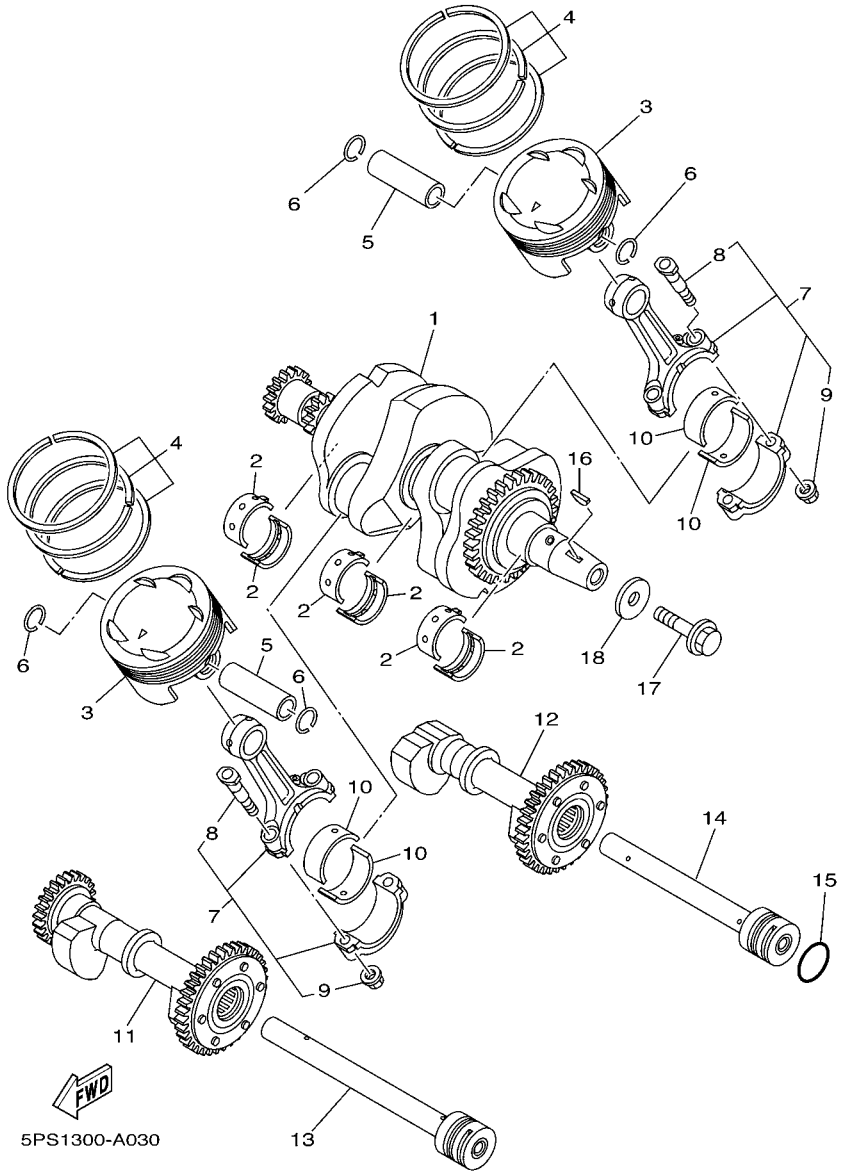

FIG. 3 CIGUENAL & PISTON

REF. Nº	CODIGO Nº	DESCRIPCION	2B04	2B05				OBSERVACIONES
1	5PS–11400–00	CIGUENAL COMPLETO	1	1				
2	3LD–11416–00	COJINETE PLANO 1	6	6				UR AZUL
	3LD–11416–10	COJINETE PLANO 1	6	6				UR NEGRO
	3LD–11416–20	COJINETE PLANO 1	6	6				UR CASTANO
	3LD–11416–30	COJINETE PLANO 1	6	6				UR VERDE
	3LD–11416–40	COJINETE PLANO 1	6	6				UR AMARILLO
	3LD–11416–50	COJINETE PLANO 1	6	6				UR ROSA
	3LD–11416–60	COJINETE PLANO 1	6	6				UR ROJO
3	5PS–11631–00	PISTON (NORMA)	2	2				
4	5BE–11603–00	JUEGO DE ANILLOS (NORMA)	2	2				
5	5PS–11633–00	PASADOR, PISTON	2	2				
6	93450–22146	SEGURO	4	4				
7	5PS–11650–00	BIELA COMPLETA	2	2				
8	3LD–11654–00	.TORNILLO DE BIELA	2	2				
9	90179–09379	.TUERCA	2	2				
10	3LD–11656–00	COJINETE PLANO	4	4				UR AZUL
	3LD–11656–10	COJINETE PLANO	4	4				UR NEGRO
	3LD–11656–20	COJINETE PLANO	4	4				UR CASTANO
	3LD–11656–30	COJINETE PLANO	4	4				UR VERDE
11	4NX–11500–01	COMPENSADOR COMPLETA	1	1				
12	4NX–11510–01	COMPENSADOR, 2	1	1				
13	3LD–11583–00	EJE, COMPENSADOR 1	1	1				
14	3LD–11584–00	EJE, COMPENSADOR 2	1	1				
15	93210–30660	ANILLO O	1	1				
16	90280–05029	CUNA WOODRUFF	1	1				
17	90105–12584	TORNILLO	1	1				
18	90201–121H0	ARANDELA PLANA	1	1				

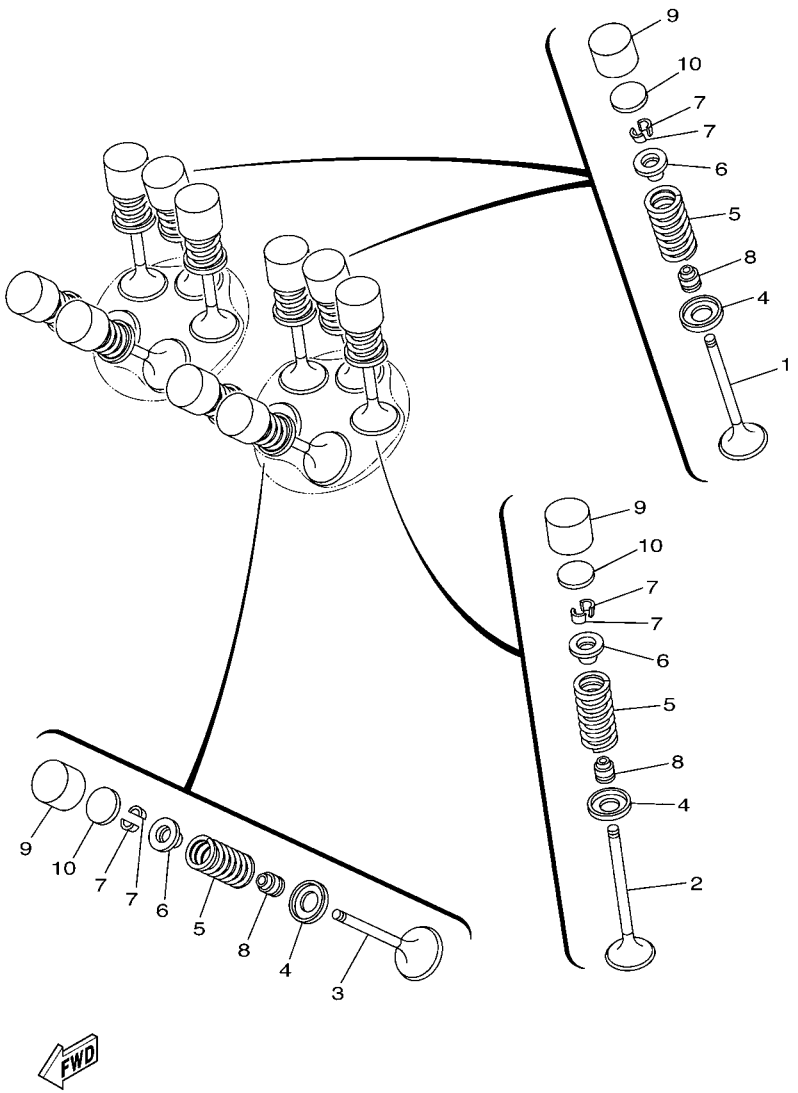

5PS1300-A040

FIG. 4 VALVULA

REF. Nº	CODIGO Nº	DESCRIPCION	2B04	2B05				OBSERVACIONES
1	3LD–12111–02	VALVULA DE ADMISION	2	2				
2	3LD–12112–02	VALVULA, DE ADMISION 2	4	4				
3	5PS–12121–00	VALVULA DE ESCAPE	4	4				
4	1WG–12116–00	ASIENTO RESORTE DE VALVULA	10	10				
5	3LD–12113–00	RESORTE VALVULA INTERNA	10	10				AZUL
6	3LD–12117–00	RETEN RESORTE DE VALVULA	10	10				
7	3LD–12118–00	SEGURO DE VALVULA	20	20				
8	51Y–12119–00	SELLO DE ACEITE VALVULA	10	10				
9	1WG–12153–21	LEVANTADOR DE VALVULA	10	10				UR AZUL
	1WG–12153–31	LEVANTADOR DE VALVULA	10	10				UR ROJO
10	3LD–12168–00	COJIN, AJUSTADOR (1.20)	10	10				UR
	3LD–12168–20	COJIN, AJUSTADOR (1.25)	10	10				UR
	3LD–12168–40	COJIN, AJUSTADOR (1.30)	10	10				UR
	3LD–12168–60	COJIN, AJUSTADOR (1.35)	10	10				UR
	3LD–12168–80	COJIN, AJUSTADOR (1.40)	10	10				UR
	3LD–12168–A0	COJIN, AJUSTADOR (1.45)	10	10				UR
	3LD–12168–F0	COJIN, AJUSTADOR (1.50)	10	10				UR
	3LD–12168–H1	COJIN, AJUSTADOR (1.55)	10	10				UR
	3LD–12168–K1	COJIN, AJUSTADOR (1.60)	10	10				UR
	3LD–12168–M1	COJIN, AJUSTADOR (1.65)	10	10				UR
	3LD–12168–R1	COJIN, AJUSTADOR (1.70)	10	10				UR
	3LD–12168–U1	COJIN, AJUSTADOR (1.75)	10	10				UR
	3LD–12168–W1	COJIN, AJUSTADOR (1.80)	10	10				UR
	3LD–12168–Y1	COJIN, AJUSTADOR (1.85)	10	10				UR
	3LD–12169–11	COJIN, AJUSTADOR (1.90)	10	10				UR
	3LD–12169–31	COJIN, AJUSTADOR (1.95)	10	10				UR
	3LD–12169–50	COJIN, AJUSTADOR (2.00)	10	10				UR

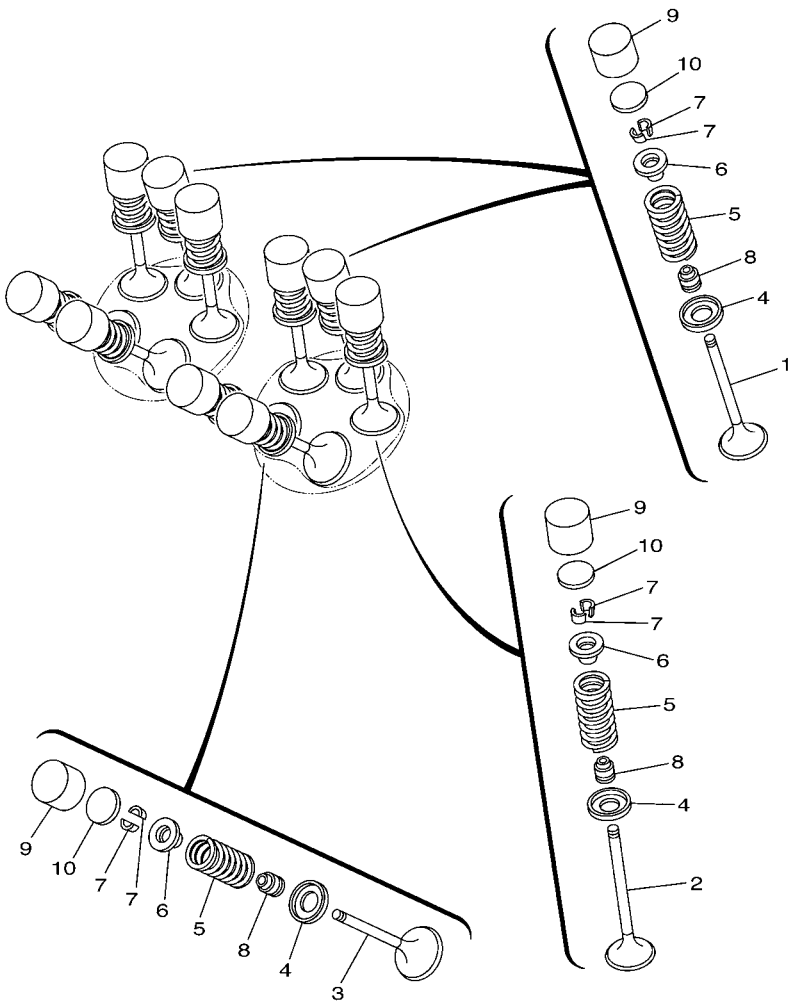

5PS1300-A040

FIG. 4 VALVULA

REF. Nº	CODIGO Nº	DESCRIPCION	2B04	2B05				OBSERVACIONES
10	3LD–12169–70	COJIN, AJUSTADOR (2.05)	10	10				UR
	3LD–12169–90	COJIN, AJUSTADOR (2.10)	10	10				UR
	3LD–12169–E0	COJIN, AJUSTADOR (2.15)	10	10				UR
	3LD–12169–G0	COJIN, AJUSTADOR (2.20)	10	10				UR
	3LD–12169–J0	COJIN, AJUSTADOR (2.25)	10	10				UR
	3LD–12169–L0	COJIN, AJUSTADOR (2.30)	10	10				UR
	3LD–12169–N0	COJIN, AJUSTADOR (2.35)	10	10				UR
	3LD–12169–T0	COJIN, AJUSTADOR (2.40)	10	10				UR

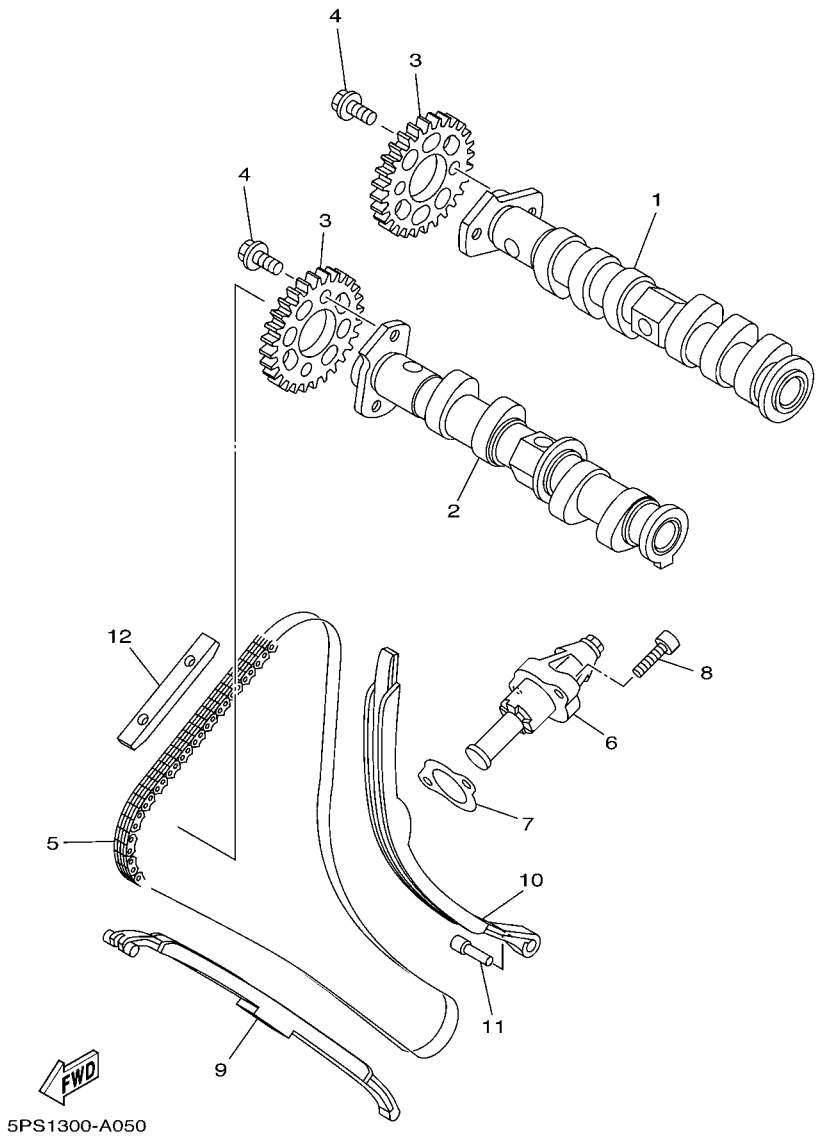

FIG. 5 ARBOL DE LEVAS & CADENA

REF. Nº	CODIGO Nº	DESCRIPCION	2B04	2B05				OBSERVACIONES
1	5PS–12171–00	ARBOL DE LEVAS 1	1	1				
2	5PS–12180–00	ARBOL DE LEVAS COMPLETO 2	1	1				
3	3LD–12176–00	CATALINA DE CADENA	2	2				
4	90105–07004	TORNILLO	4	4				
5	94591–40138	CADENA (82RH2015-138L)	1	1				
6	5PS–12210–20	TENSOR CADENA DE LEVA	1					
	5PS–12210–10	TENSOR CADENA DE LEVA		1				
7	5JW–12213–00	EMPAQUE DE CAJA TENSOR	1	1				
8	91314–06020	PERNO	2	2				
9	3LD–12251–00	AMORTIGUADOR CADENA 1	1	1				
10	5PS–12252–00	AMORTIGUADOR CADENA 2	1	1				
11	3LD–12247–00	EJE TENSOR	1	1				
12	5BE–12241–00	TOPE DE GUIA 2	1	1				

FIG. 6 BOMBA DE AGUA

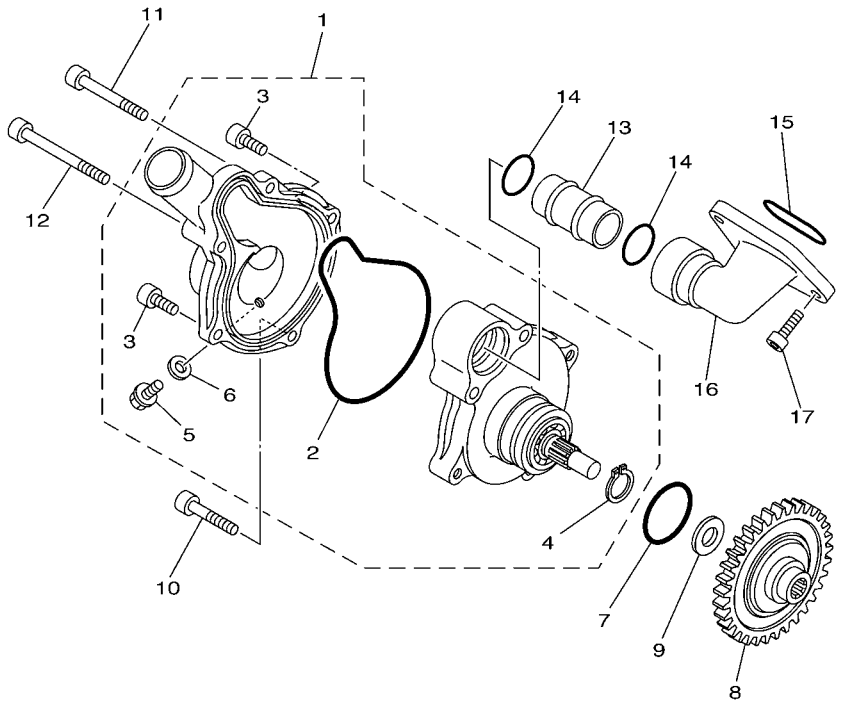

5PS1300-A060

REF. Nº	CODIGO Nº	DESCRIPCION	2B04	2B05				OBSERVACIONES
1	5PS–12420–10	BOMBA DE AGUA COMPLETA	1					
	5PS–12420–00	BOMBA DE AGUA COMPLETA		1				
2	3LD–12439–00	.ANILLO O	1	1				
3	91314–06020	.PERNO	2	2				
4	99009–12400	.PRESILLA REDONDA	1	1				
5	95024–06012	.PERNO, DE BRIDA	1	1				
6	90430–06014	.JUNTA	1	1				
7	93210–33133	ANILLO O	1	1				
8	3VD–12459–00	ENGRANAJE EJE IMPULSOR	1	1				
9	90201–127E1	ARANDELA PLANA	1	1				
10	91314–06030	PERNO	1	1				
11	91314–06045	PERNO	1	1				
12	91314–06060	PERNO	1	1				
13	3LD–12481–00	TUBO 1	1	1				
14	93210–21190	ANILLO O	2	2				
15	93210–357A2	ANILLO O	1	1				
16	5PS–12469–10	CONDUCTO	1					
	5PS–12469–00	CONDUCTO		1				
17	91314–06016	PERNO	2	2				

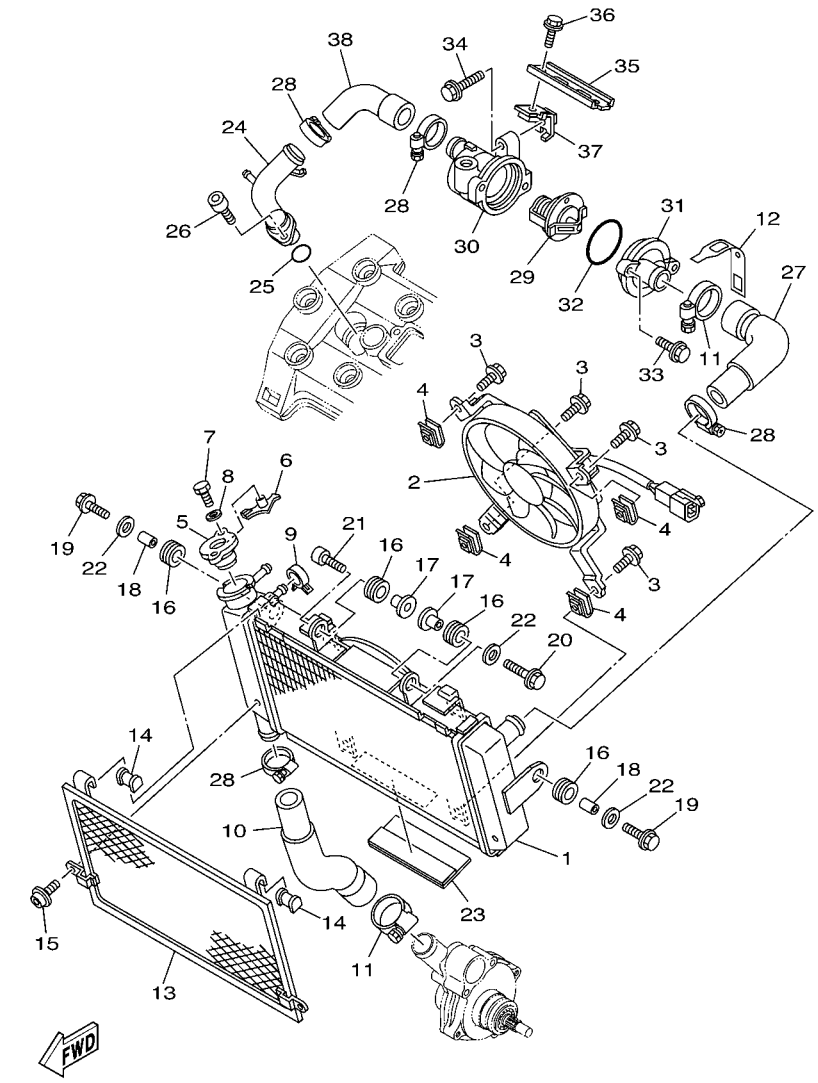

2B01300-D070

FIG. 7 RADIADOR & MANGUERA

REF. Nº	CODIGO Nº	DESCRIPCION	2B04	2B05				OBSERVACIONES
1	5PS–12461–00	RADIADOR COMPLETO	1	1				
2	5PS–12405–00	COMPRESOR	1	1				
3	90119–06044	TORNILLO CON ARANDELA	4	4				
4	1AA–12535–00	EMPAQUETADURA	4	4				
5	4FL–12462–00	TAPON, DEL RADIADOR	1	1				
6	1KT–12437–00	TOPE	1	1				
7	97007–05012	PERNO	1	1				
8	92907–05600	ARANDELA	1	1				
9	90467–10038	PRESILLA	1	1				
10	5PS–12578–00	MANGUERA 3	1	1				
11	90450–38040	BRIDA, MANGUERA	2	2				
12	5GV–1246E–00	CUBIERTA 2	1	1				
13	5PS–12467–00	CUBIERTA DEL RADIADOR	1	1				
14	1UF–12435–00	EMPAQUE	2	2				
15	90111–06037	TORNILLO	2	2				
16	90480–15363	TAPON	4	4				
17	90387–0614M	ESPACIADOR	2	2				
18	90387–0714B	ESPACIADOR	2	2				
19	95807–06025	TORNILLO	2	2				
20	95807–06030	TORNILLO	1	1				
21	91317–06025	PERNO	1	1				
22	90201–06071	ARANDELA PLANA	3	3				
23	5PS–12465–00	AMORTIGUADOR DE RADIADOR	1	1				
24	4NX–12482–00	TUBO 2	1	1				
25	93210–18417	ANILLO O	1	1				
26	91317–06016	PERNO	1	1				
27	5PS–12576–00	MANGUERA 1	1	1				

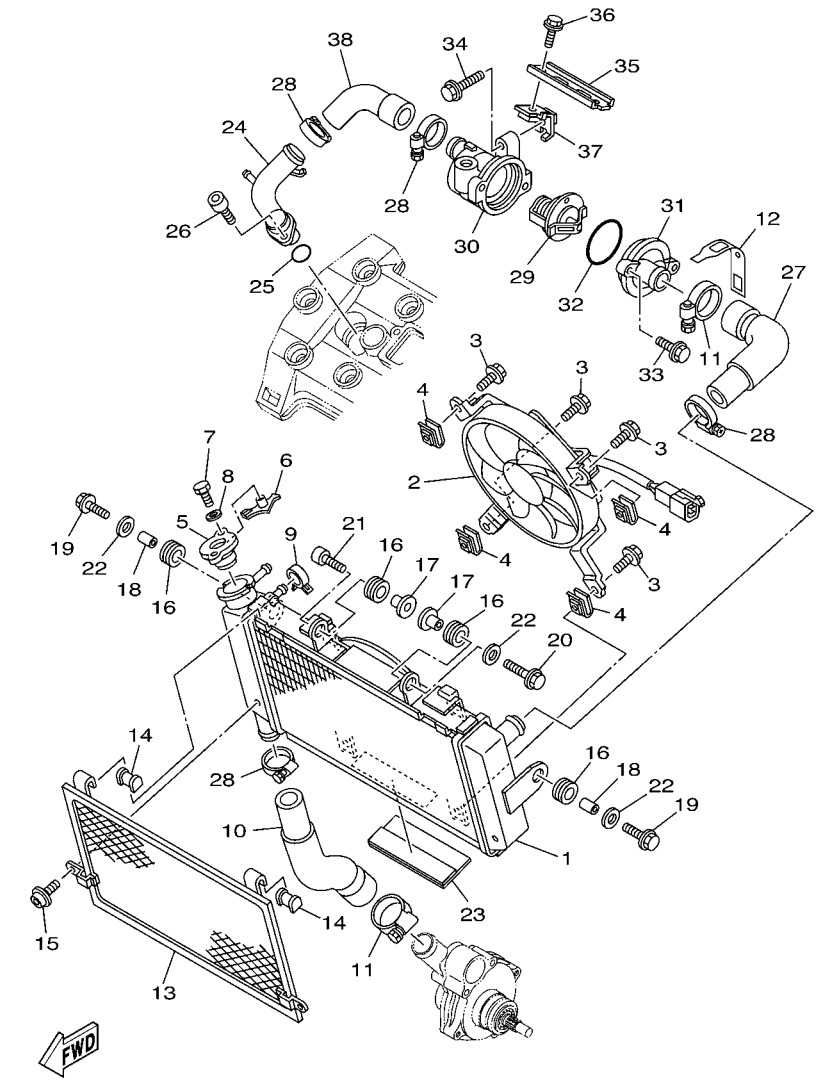

FIG. 7 RADIADOR & MANGUERA

REF. Nº	CODIGO Nº	DESCRIPCION	2B04	2B05				OBSERVACIONES
28	90450–32015	BRIDA, MANGUERA	4	4				
29	1AE–12410–00	TERMOSTATO CONJUNTO	1	1				
30	5PS–12417–00	ENCAJE DE TERMOSTATO	1	1				
31	4NX–12413–00	CUBIERTA TERMOSTATO	1	1				
32	93210–49046	ANILLO O	1	1				
33	95022–06020	PERNO, DE BRIDA	2	2				
34	95027–06025	PERNO, DE BRIDA	1	1				
35	5PS–1244E–00	SOPORTE 1	1	1				
36	95027–06010	PERNO, DE BRIDA	2	2				
37	5PS–1244F–00	SOPORTE 2	1	1				
38	5PS–12579–00	MANGUERA 4	1	1				

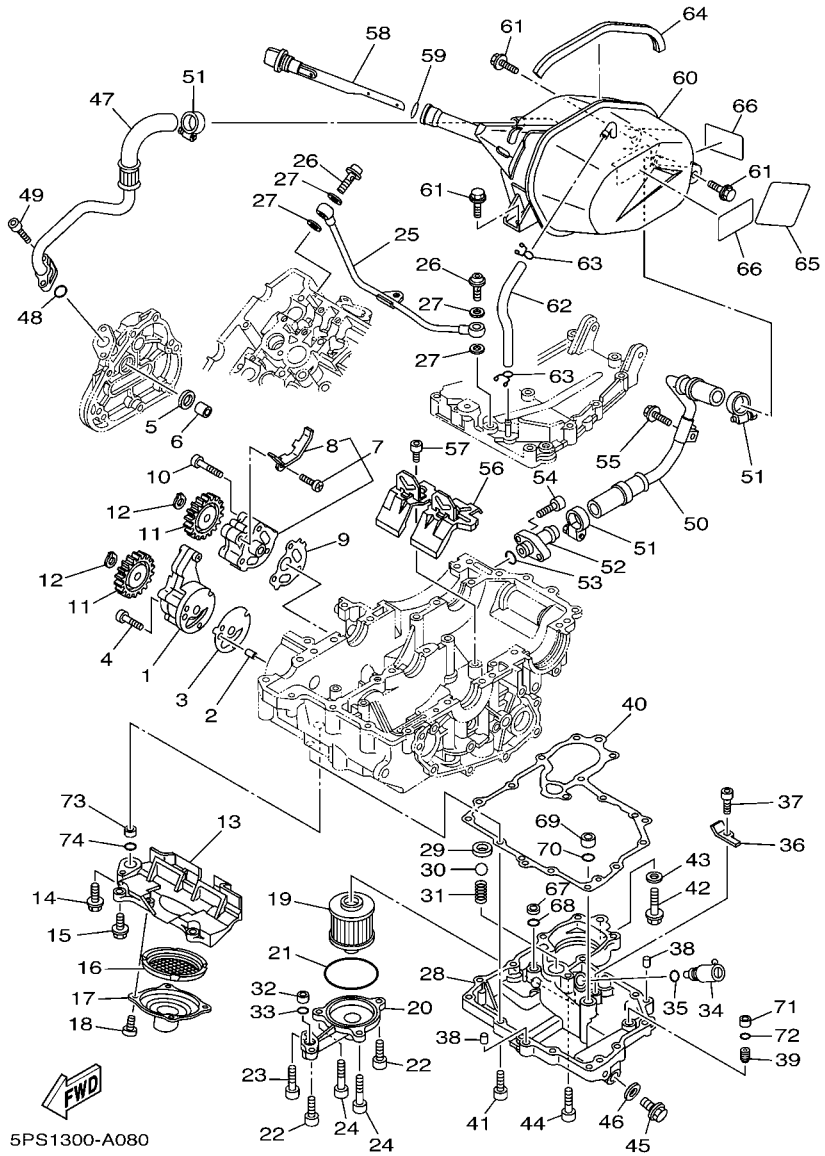

FIG. 8 BOMBA DE ACEITE

REF. Nº	CODIGO Nº	DESCRIPCION	2B04	2B05				OBSERVACIONES
1	3LD–13300–00	BOMBA DE ACEITE COMPLETA	1	1				
2	99530–08012	PASADOR, DE ESPIGA	1	1				
3	5PS–13329–00	EMPAQUE TAPA DE BOMBA	1	1				
4	98507–06045	TORNILLO DE CABEZA PLANA	3	3				
5	90430–14131	JUNTA	1	1				
6	90387–120W5	ESPACIADOR	1	1				
7	4NX–13303–00	COMBA DE ACEITE COMPLETA, 2	1	1				
8	3LD–13371–00	.PLACA	1	1				
9	3LD–13339–00	EMPAQUETADURA, CUBIERTA BOMBA	1	1				
10	98507–06035	TORNILLO DE CABEZA PLANA	3	3				
11	3VD–13325–00	ENGRANAJE IMPULSOR DE BOMBA 1	2	2				
12	99009–11400	PRESILLA REDONDA	2	2				
13	3VD–13412–00	CAJA DE FILTRO	1	1				
14	95027–06025	PERNO, DE BRIDA	1	1				
15	95027–06020	PERNO, DE BRIDA	4	4				
16	3VD–13415–00	SELLO COLADOR ACEITE	1	1				
17	5PS–13411–00	FILTRO DE ACEITE	1	1				
18	90110–06018	TORNILLO ALLEN	4	4				
19	5JX–13440–00	ELEMENTO FILTRO DE ACEITE	1	1				
20	5PS–13447–10	TAPA DEL ELEMENTO	1					
	5PS–13447–00	TAPA DEL ELEMENTO		1				
21	93210–64297	ANILLO O	1	1				
22	91314–06020	PERNO	2	2				
23	91314–06030	PERNO	1	1				
24	91314–06040	PERNO	2	2				
25	5PS–13161–00	TUBO CONDUCTOR 1	1	1				
26	90401–10002	PERNO DE UNION	2	2				

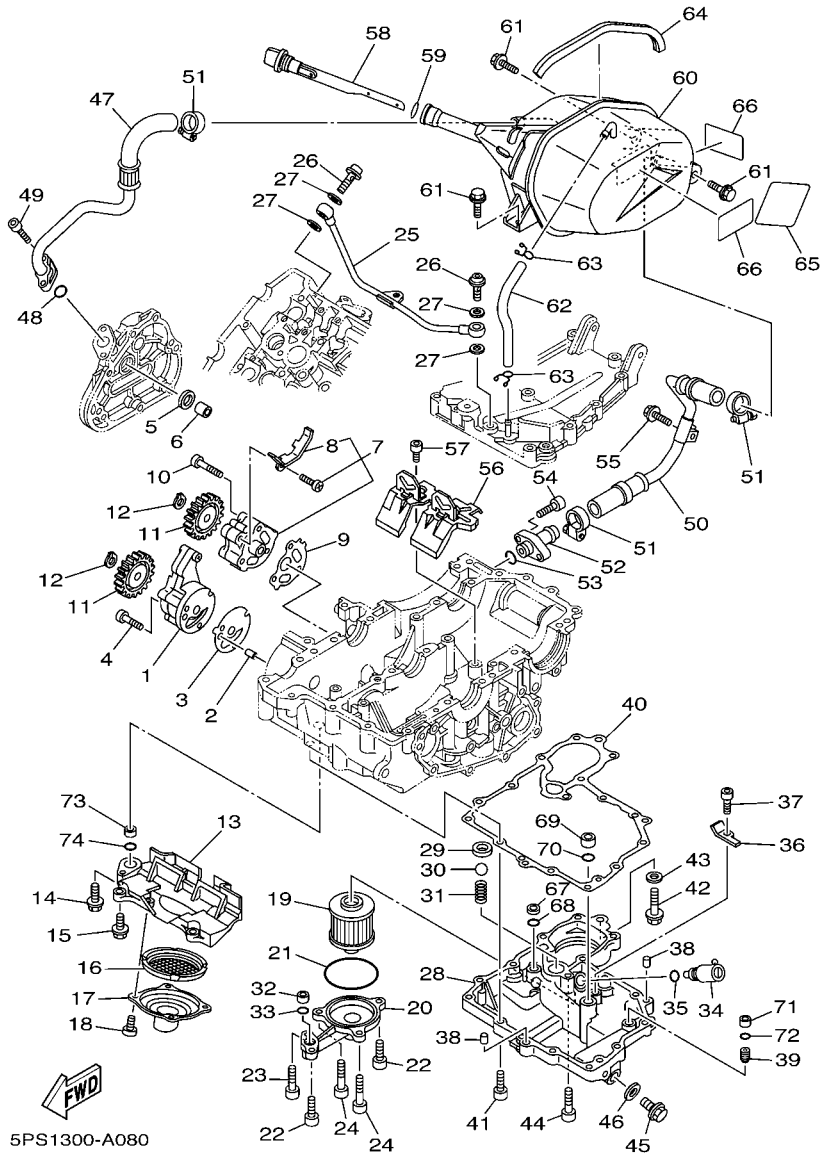

FIG. 8 BOMBA DE ACEITE

REF. Nº	CODIGO Nº	DESCRIPCION	2B04	2B05				OBSERVACIONES
27	90430–10188	JUNTA	4	4				
28	5PS–13417–10	TAPA DE FILTRO	1					
	5PS–13417–00	TAPA DE FILTRO		1				
29	3LD–13113–00	ASIENTO BOLA RETENSORA	1	1				
30	93505–08030	BOLA	1	1				
31	90501–104F9	RESORTE DE COMPRESION	1	1				
32	90387–106W6	ESPACIADOR	1	1				
33	93210–12790	ANILLO O	1	1				
34	11H–13490–00	VALVELA DE DESCOMPRESION	1	1				
35	93210–10096	ANILLO O	1	1				
36	3LD–13151–00	SOPORTE	1	1				
37	90110–06018	TORNILLO ALLEN	1	1				
38	99530–08016	PASADOR, DE ESPIGA	2	2				
39	4H7–15138–00	BOQUILLA 1	1	1				
40	5PS–13414–02	EMPAQUE DE TAPA FILTRO	1	1				
41	91314–06025	PERNO	13	13				
42	95024–10040	PERNO, DE BRIDA	1	1				
43	90430–10188	JUNTA	1	1				
44	91314–06035	PERNO	1	1				
45	90340–14132	TORNILLO, DE DRENAJE	1	1				
46	214–11198–01	EMPAQUE	1	1				
47	5PS–13464–00	MANGUERA DE ACEITE 1	1	1				
48	93210–13657	ANILLO O	1	1				
49	91314–06020	PERNO	2	2				
50	5PS–13465–00	MANGUERA DE ACEITE 2	1	1				
51	90450–25037	BRIDA, MANGUERA	3	3				
52	3VD–13416–00	TUBO DE ACEITE 1	1	1				

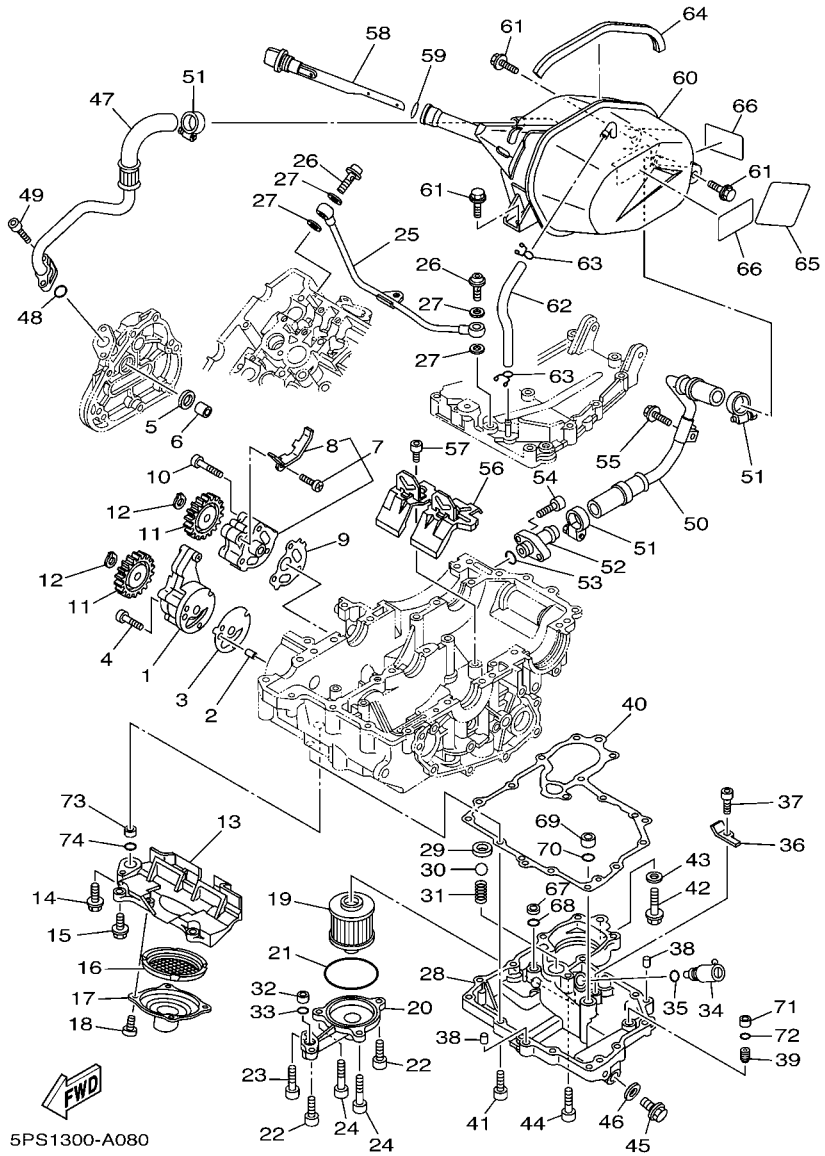

FIG. 8 BOMBA DE ACEITE

REF. Nº	CODIGO Nº	DESCRIPCION	2B04	2B05				OBSERVACIONES
53	93210–13657	ANILLO O	1	1				
54	90110–06093	TORNILLO ALLEN	2	2				
55	90109–06056	PERNO	1	1				
56	5PS–13317–00	PLACA DEFLECTORA	1	1				
57	90110–06018	TORNILLO ALLEN	2	2				
58	5PS–21761–00	MEDIDOR DE NIVEL	1	1				
59	93210–21190	ANILLO O	1	1				
60	5PS–21750–10	DEPOSITO DE ACEITE COMPLETO	1	1				
61	95827–06014	TORNILLO	3	3				
62	90445–11026	TUBO	1	1				
63	90467–10008	PRESILLA	2	2				
64	5JX–24188–00	MOLDURA DEPOSITO COMBUST.	1	1				
65	5BM–21652–00	PROTECTOR	1	1				
66	5BM–21268–00	SELLO	2	2				
67	90387–085N0	ESPACIADOR	1	1				
68	93210–10096	ANILLO O	1	1				
69	90387–106W6	ESPACIADOR	1	1				
70	93210–12790	ANILLO O	1	1				
71	90387–06761	ESPACIADOR	1	1				
72	93210–07135	ANILLO O	1	1				
73	90387–130W6	ESPACIADOR	1	1				
74	93210–15566	ANILLO O	1	1				

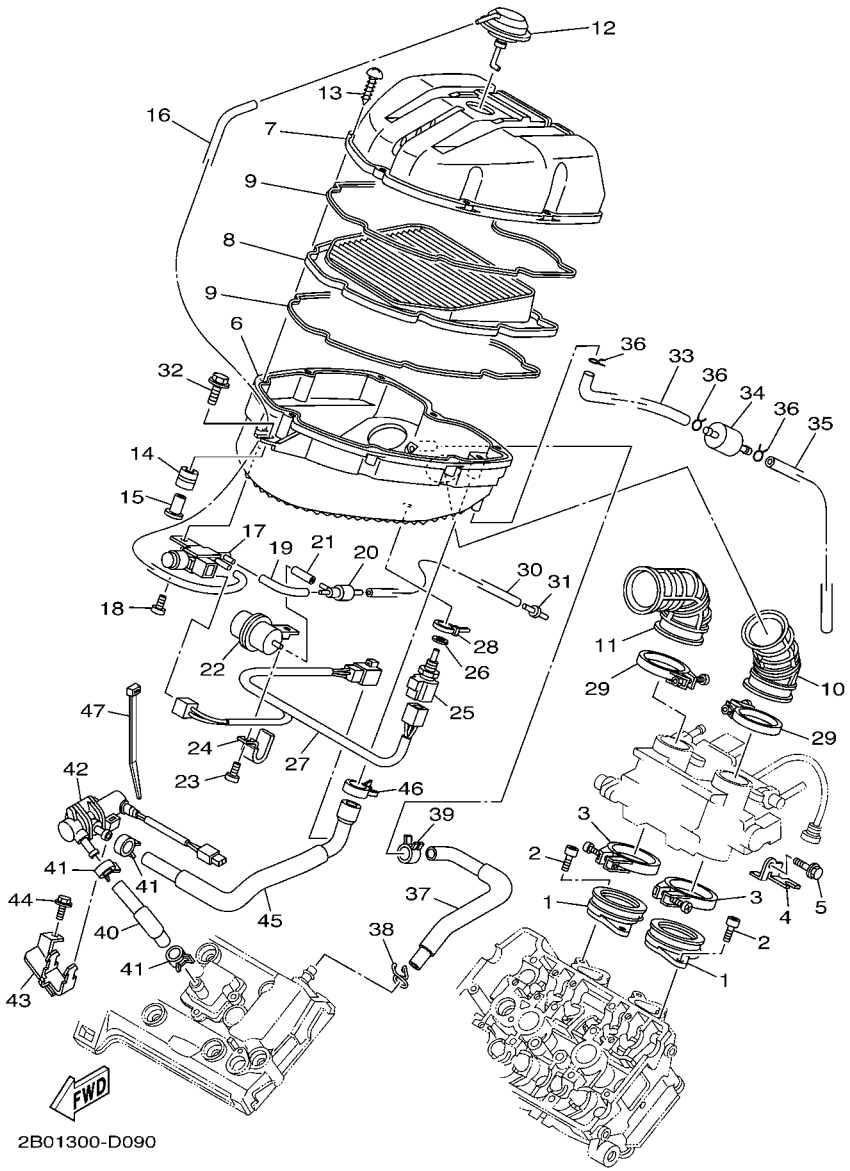

FIG. 9 ADMISION

REF. Nº	CODIGO Nº	DESCRIPCION	2B04	2B05				OBSERVACIONES
1	5PS–13586–00	TOBERA DE CARBURADOR 1	2	2				
2	91317–06020	PERNO	4	4				
3	90450–63001	BRIDA, MANGUERA	2	2				
4	5PS–14414–00	SOPORTE 2	1	1				
5	95027–06010	PERNO, DE BRIDA	1	1				
6	5PS–14411–00	CAJA FILTRO DEL AIRE 1	1	1				
7	5PS–14421–00	CAJA FILTRO DEL AIRE 2	1	1				
8	5PS–14451–00	ELEMENTO DEL FILTRO DEL AIRE	1	1				
9	5PS–14452–00	SELLO	2	2				
10	5PS–14453–00	UNION DEL FILTRO DEL AIRE 1	1	1				
11	5PS–14463–00	UNION DE FILTRO DE AIRE 2	1	1				
12	5PS–14545–00	DIAFRAGMA	1	1				
13	97707–50020	TORNILLO ROSCA HEMBRA	8	8				
14	5PS–14435–00	ANILLO PROTECTOR	1	1				
15	5PS–14264–00	ESPACIADOR	1	1				
16	5PS–14419–00	TUBO	1	1				
17	5PS–1410H–00	SOLENOIDE VALVULA	1	1				
18	98907–05012	TORNILLO DE LIGAR	1	1				
19	5PS–14148–00	TUBO	1	1				
20	5PS–14552–00	VALVULA DE RETENCION	1	1				
21	90445–08010	TUBO	1	1				
22	5PS–1446E–00	DEPOSITO, COMPENSACION	1	1				
23	98907–05016	TORNILLO DE LIGAR	1	1				
24	90462–05005	BRIDA	1	1				
25	4BH–83591–00	UNIDAD TERMOSTATO	1	1				
26	90430–12202	JUNTA	1	1				
27	5PS–82386–00	EXTENSION, ARNES DE CABLES	1	1				

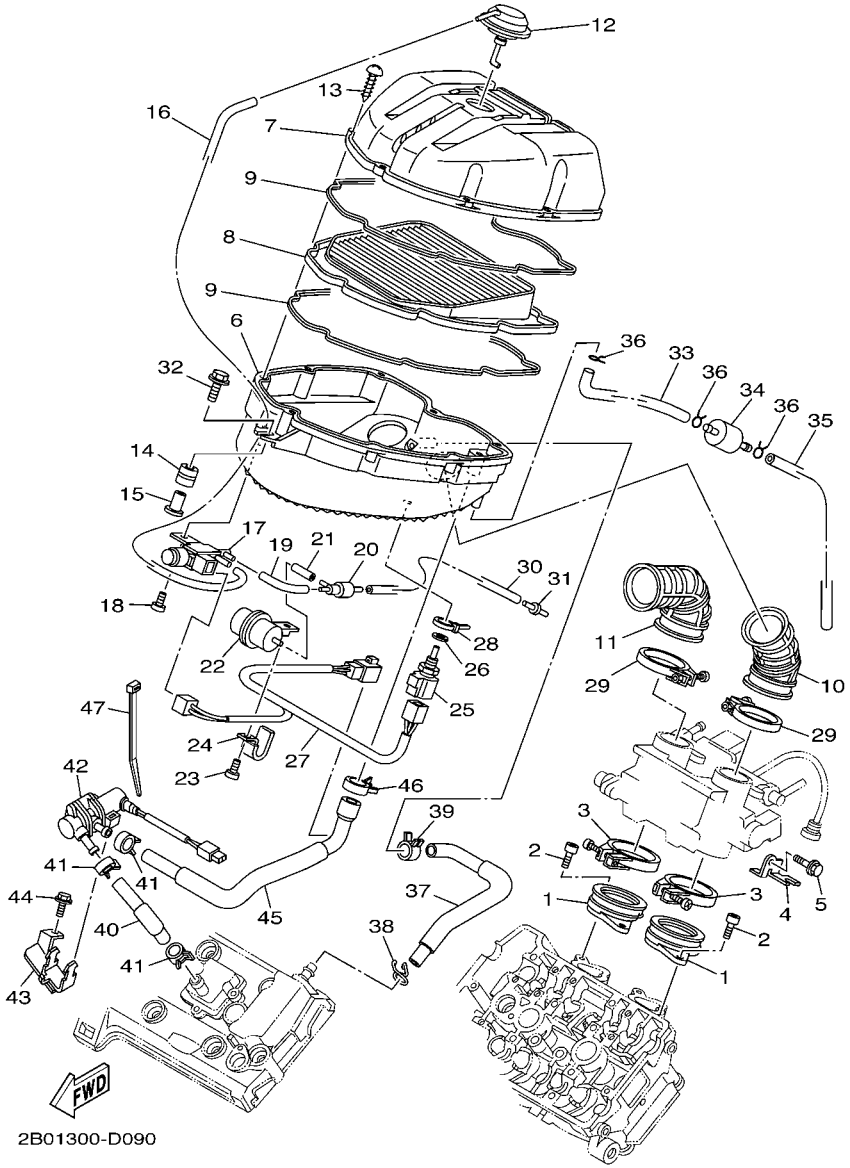

FIG. 9 ADMISION

REF. Nº	CODIGO Nº	DESCRIPCION	2B04	2B05				OBSERVACIONES
28	5Y9–12491–00	GRAMPA 1	1	1				
29	90450–52002	BRIDA, MANGUERA	2	2				
30	90445–08024	TUBO	1	1				
31	5PS–14568–00	UNION	1	1				
32	90119–06214	TORNILLO CON ARANDELA	1	1				
33	5PS–1443E–00	TUBO, DRENAJE	1	1				
34	4X7–2149Y–00	FILTRO COMPLETO	1	1				
35	90445–116H6	TUBO (L570)	1	1				
36	90467–11106	PRESILLA	3	3				
37	5PS–11166–10	TUBO RESPIRADERO 1	1	1				
38	90467–14015	PRESILLA	1	1				
39	90468–08104	PRESILLA	1	1				
40	5PS–14881–00	TUBO 1	1	1				
41	90467–17003	PRESILLA	3	3				
42	5PS–14840–00	VALVULA, CORTE DE AIRE	1	1				
43	2B0–14834–00	SOPORTE	1	1				
44	95027–06010	PERNO, DE BRIDA	1	1				
45	5PS–14882–10	TUBO 2	1	1				
46	90467–20086	PRESILLA	1	1				
47	90465–10098	BRIDA	1	1				

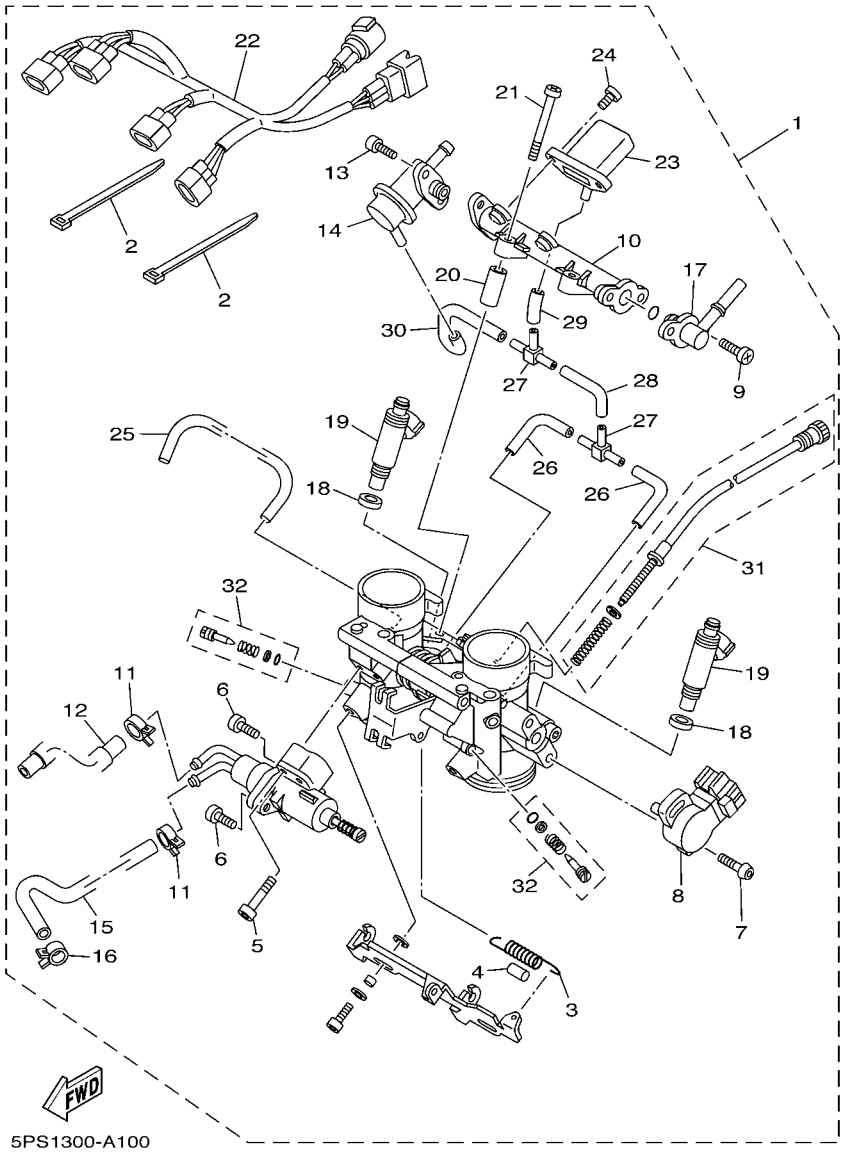

FIG. 10 ADMISION 2

REF. Nº	CODIGO Nº	DESCRIPCION	2B04	2B05				OBSERVACIONES
1	5PS–13750–30	CAJA DE ACELERADOR COMPL.	1	1				
2	5Y9–12491–00	.GRAMPA 1	2	2				
3	5JW–14589–00	.RESORTE	1	1				
4	5DM–14936–00	.ASIENTO DE RESORTE	1	1				
5	98507–05030	.TORNILLO DE CABEZA PLANA	2	2				
6	98507–05014	.TORNILLO DE CABEZA PLANA	2	2				
7	8CC–14216–10	.TORNILLO	2	2				
8	3P6–85885–00	.TERMICA SENSORIO	1	1				
9	98507–05010	.TORNILLO DE CABEZA CON PLANA	2	2				
10	5PS–13938–00	.TUBO DE ADMISION	1	1				
11	90467–11090	.PRESILLA	2	2				
12	5PS–1243E–00	.TUBO 2	1	1				
13	98507–05010	.TORNILLO DE CABEZA CON PLANA	2	2				
14	5PS–13906–00	.REGULADOR	1	1				
15	5PS–1243A–00	.TUBO 1	1	1				
16	90467–09037	.PRESILLA	1	1				
17	5PS–12881–00	.TAPA INJECTO DE COMBUSTIBLE 1	1	1				
18	90430–09002	.JUNTA	2	2				
19	5PS–13761–00	.INYECTOR	2	2				
20	5PS–14996–00	.TUBO	2	2				
21	98507–06045	.TORNILLO DE CABEZA PLANA	2	2				
22	5PS–82509–01	.CABLE SUBCONDUCTOR	1	1				
23	1C7–82380–00	.SENSOR DE PRESION	1	1				
24	92507–06014	.TORNILLO CABEZA CONICA PLANA	2	2				
25	5PS–14349–01	.TUBO	1	1				
26	5PS–14987–00	.TUBO	2	2				
27	68V–24376–00	.TUBO DE UNION 1	2	2				

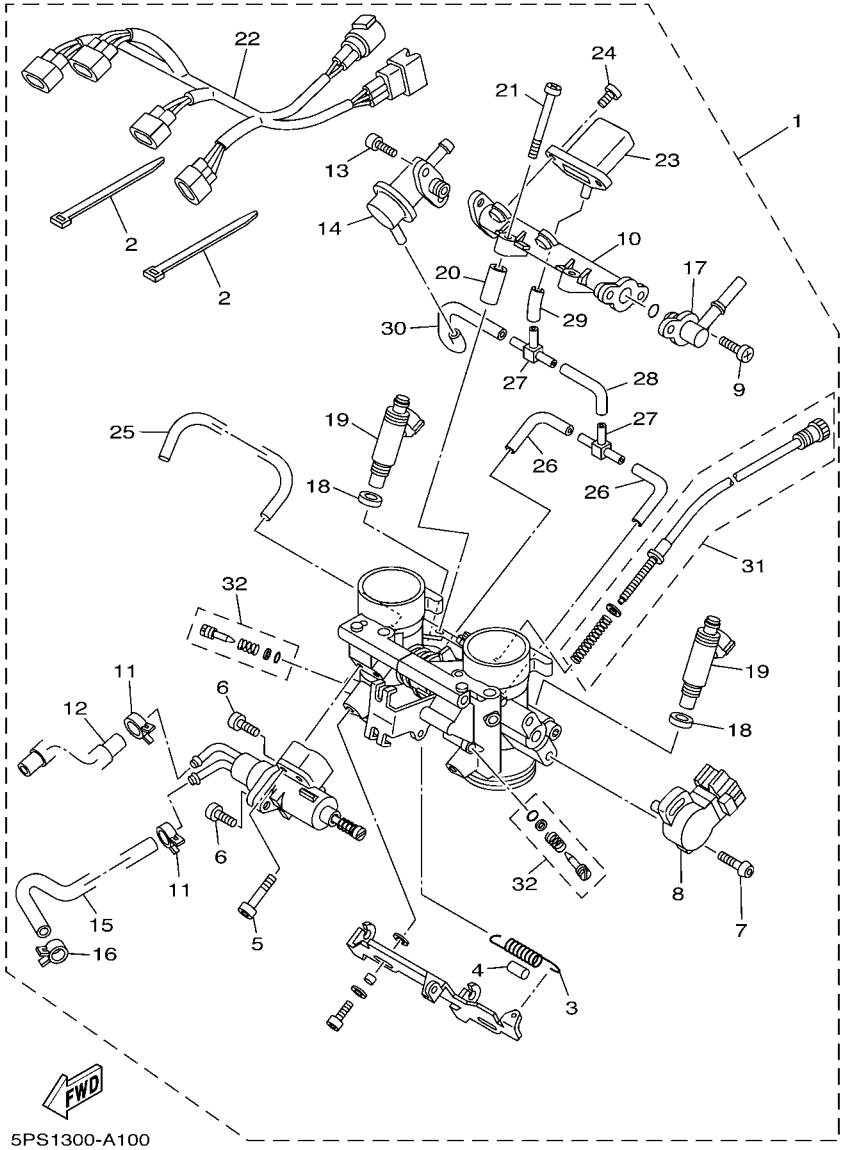

FIG. 10 ADMISION 2

REF. Nº	CODIGO Nº	DESCRIPCION	2B04	2B05				OBSERVACIONES
28	5JW–24311–00	.TUBO DE COMBUSTIBLE 1	1	1				
29	5FL–14348–10	.MANGUERA	1	1				
30	5FL–14348–00	.MANGUERA	1	1				
31	5PS–14103–00	.CJTO. TORNILLO DEL RALENTI	1	1				
32	5JW–14104–00	.CJTO. TORNNILLO DE AIRE	1	1				

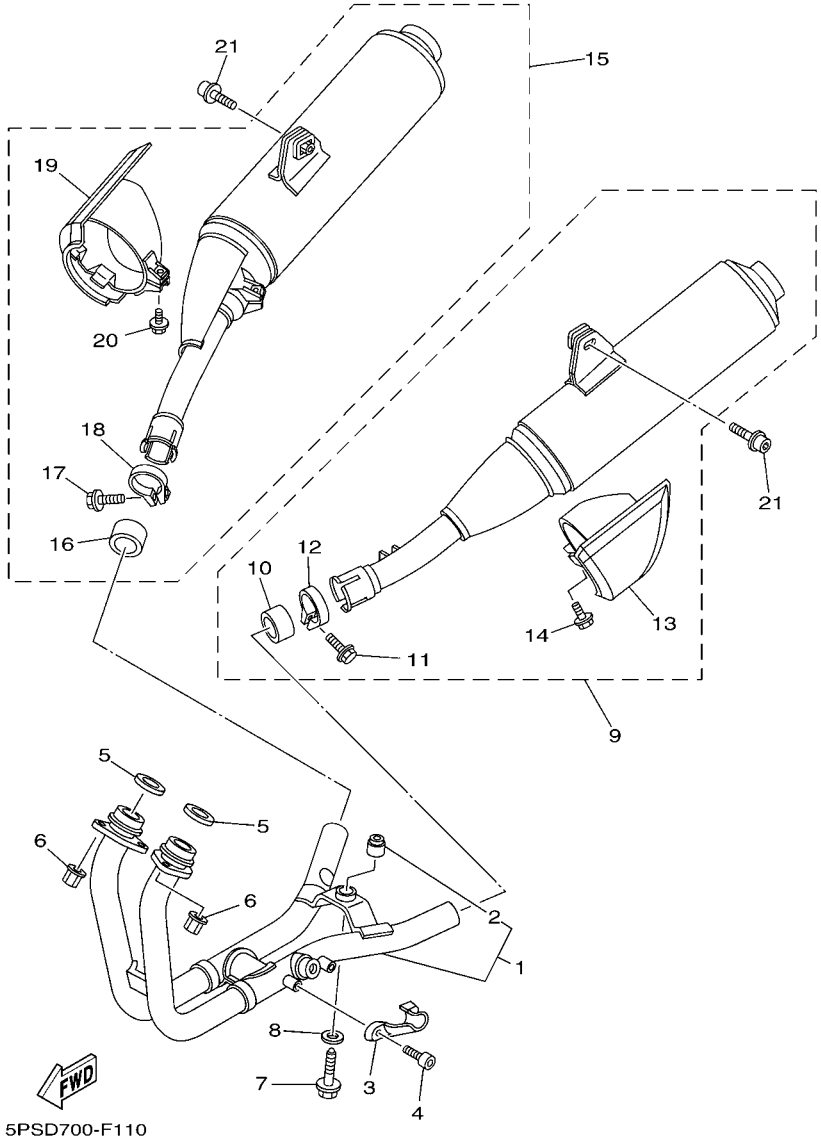

5PSD700-F110

FIG. 11 DESCARGA

REF. Nº	CODIGO Nº	DESCRIPCION	2B04	2B05				OBSERVACIONES
1	5PS–14610–10	TUBO DE ESCAPE COMPLETO 1	1	1				
2	36Y–27414–00	.AMORTIGUADOR DE APOYAPIE	1	1				
3	5PS–14628–00	PROTECTOR DE TUBO DE ESCAPE	1	1				
4	91380–06010	PERNO	2	2				
5	3VD–14613–01	JUNTA, TUBO DE ESCAPE	2	2				
6	90179–08410	TUERCA	4	4				
7	90109–08170	PERNO	1	1				
8	90201–08753	ARANDELA PLANA	1	1				
9	2B0–14710–00	TUBO DE ESCAPE COMPLETO 1	1	1				
10	5PX–14755–00	.EMPAQUE DE SILENCIADOR	1	1				
11	95024–08025	.PERNO, DE BRIDA	1	1				
12	5PS–14715–00	.BANDA DE SILENCIADOR	1	1				
13	2B0–14738–00	.PROTECTOR DE SILENCIADOR 3	1	1				
14	95024–06012	.PERNO, DE BRIDA	1	1				
15	2B0–14720–00	TUBO DE ESCAPE COMPLETO 2	1	1				
16	5PX–14755–00	.EMPAQUE DE SILENCIADOR	1	1				
17	95024–08025	.PERNO, DE BRIDA	1	1				
18	5PS–14725–00	.BANDA DE SILENCIADOR	1	1				
19	2B0–14748–00	.PROTECTOR DE SILENCIADOR 4	1	1				
20	95024–06012	.PERNO, DE BRIDA	1	1				
21	90109–087F1	PERNO	2	2				

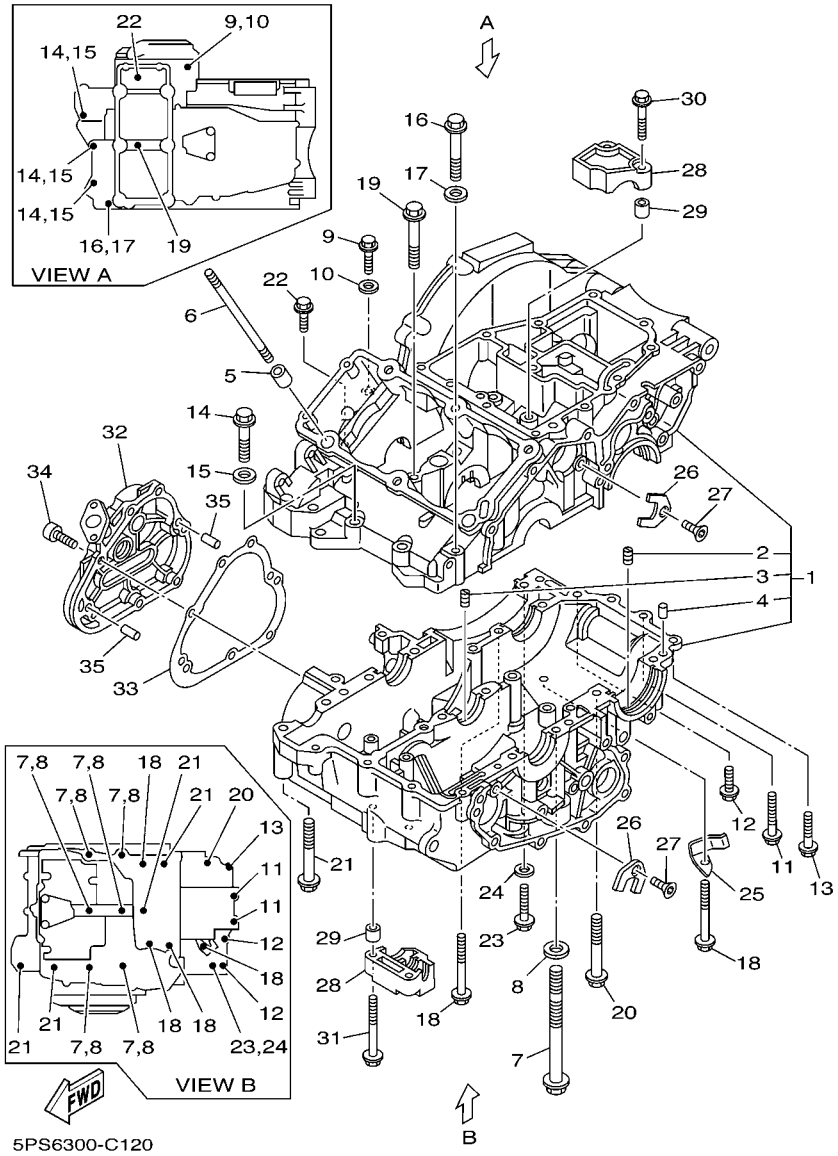

FIG. 12 CARTER

REF. Nº	CODIGO Nº	DESCRIPCION	2B04	2B05				OBSERVACIONES
1	5PS–15100–10	CARTER COMPLETO	1					
	5PS–15100–00	CARTER COMPLETO		1				
2	4XV–15138–00	.BOQUILLA 1	1	1				
3	4G0–15138–00	.BOQUILLA 1	1	1				
4	99530–10114	.PASADOR, DE ESPIGA	1	1				
5	99530–14016	PASADOR, DE ESPIGA	2	2				
6	3LD–11361–00	PERNO RETEN DE CILINDRO 1	6	6				
7	90105–10560	TORNILLO	6	6				
8	90201–11597	ARANDELA PLANA	6	6				
9	95814–06040	TORNILLO	1	1				
10	90201–066F0	ARANDELA PLANA	1	1				
11	95817–06055	TORNILLO	2	2				
12	95817–06020	TORNILLO	2	2				
13	95817–06030	TORNILLO	1	1				
14	95814–08050	TORNILLO	3	3				
15	90201–08087	ARANDELA PLANA	3	3				
16	95814–08060	TORNILLO	1	1				
17	90201–08087	ARANDELA PLANA	1	1				
18	95817–06070	TORNILLO	4	4				
19	95817–08065	TORNILLO	1	1				
20	95814–08070	TORNILLO	1	1				
21	95817–08075	TORNILLO	4	4				
22	95817–06025	TORNILLO	1	1				
23	95814–06040	TORNILLO	1	1				
24	90201–066F0	ARANDELA PLANA	1	1				
25	90465–10028	BRIDA	1	1				
26	3LD–15191–00	PLACA	2	2				

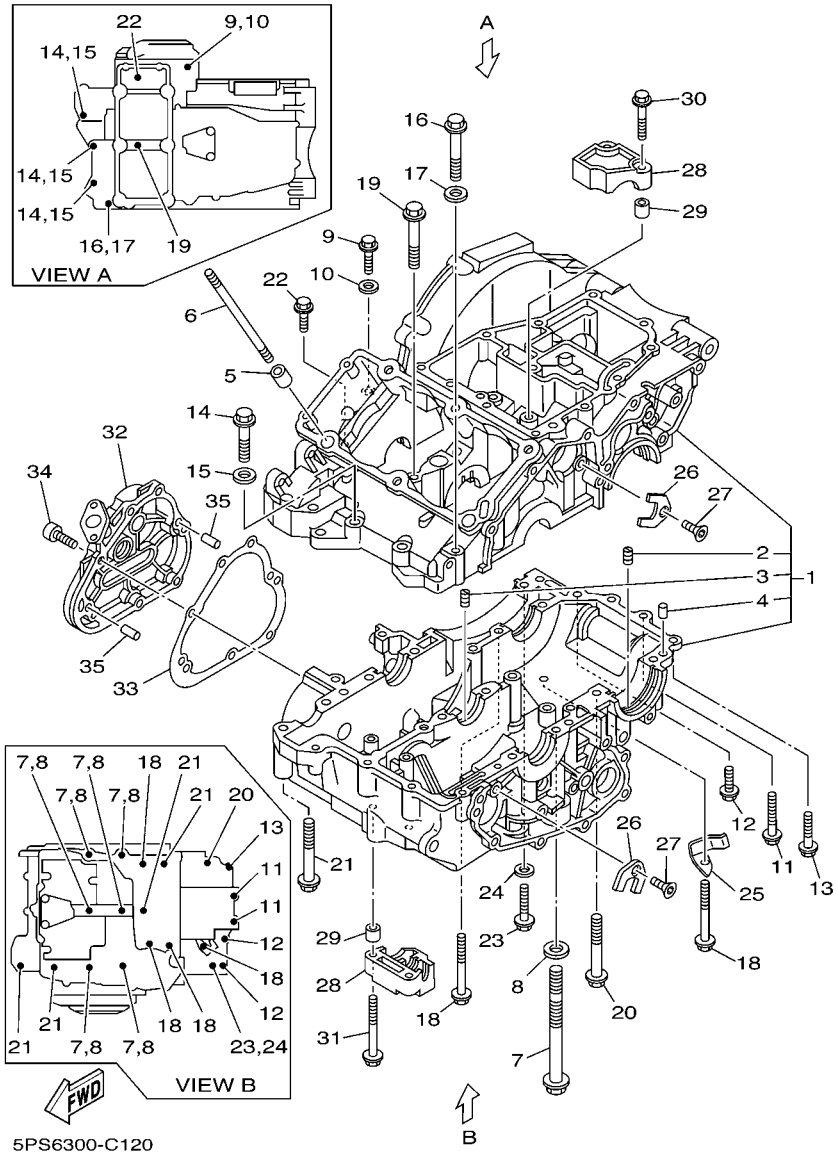

FIG. 12 CARTER

REF. Nº	CODIGO Nº	DESCRIPCION	2B04	2B05				OBSERVACIONES
27	90151–06008	TORNILLO EMBUTIDO	2	2				
28	3LD–15118–00	SOPORTE	2	2				
29	99530–08016	PASADOR, DE ESPIGA	4	4				
30	95817–06045	TORNILLO	2	2				
31	95817–06070	TORNILLO	2	2				
32	5PS–15416–10	CUBIERTA DE BOMBA DE ACEITE	1					
	5PS–15416–00	CUBIERTA DE BOMBA DE ACEITE		1				
33	5PS–15456–02	EMPAQ CUBTA.BOMBA ACEITE 1	1	1				
34	91314–06020	PERNO	7	7				
35	99530–08012	PASADOR, DE ESPIGA	2	2				

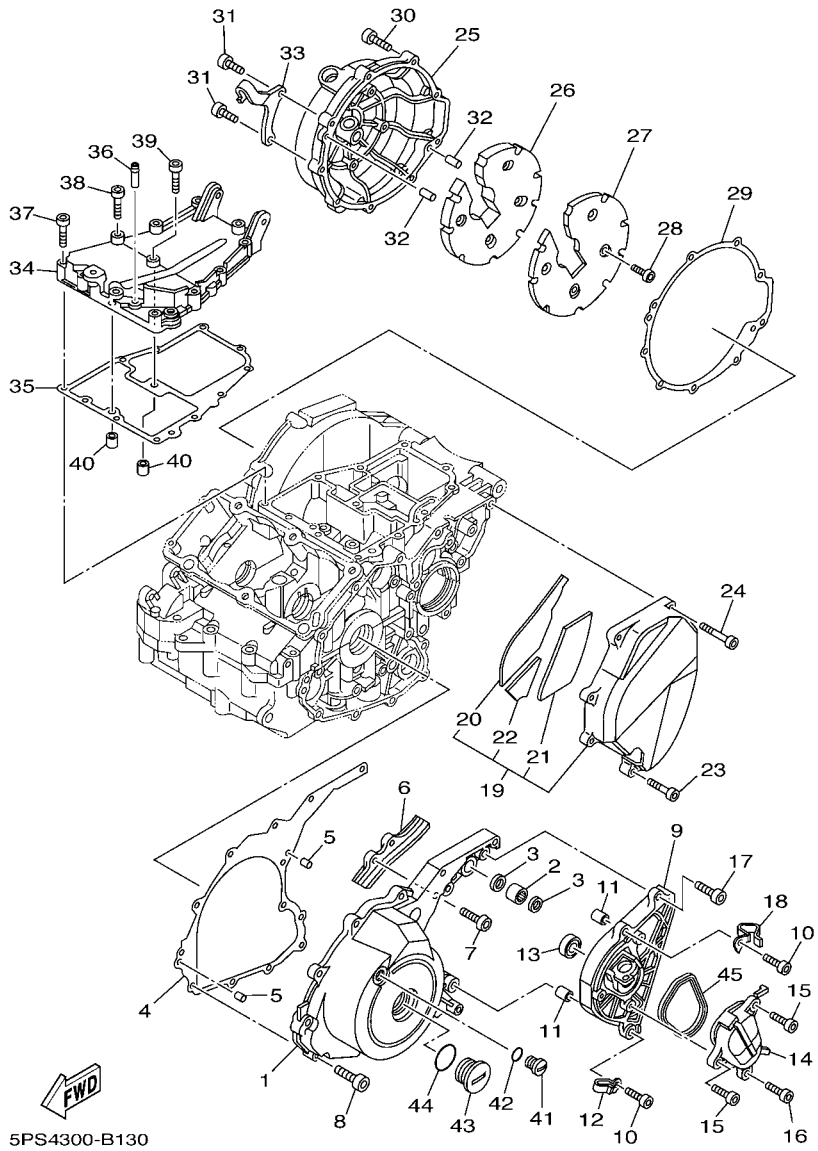

FIG. 13 CUBIERTA DE CARTER 1

REF. Nº	CODIGO Nº	DESCRIPCION	2B04	2B05				OBSERVACIONES
1	5PS–15411–10	CUBIERTA DE CARTER 1	1					
	5PS–15411–00	CUBIERTA DE CARTER 1		1				
2	93317–21288	COJINETE	1	1				
3	93109–12075	SELLO ACEITE	2	2				
4	5PS–15451–02	EMPAQ DE CUBIERTA DE CARTER	1	1				
5	99530–08012	PASADOR, DE ESPIGA	2	2				
6	5PS–17653–00	CORREDERA	1	1				
7	90109–065A8	PERNO	2	2				
8	91314–06025	PERNO	9	9				
9	5PS–1541E–00	APOYO	1	1				
10	91317–06030	PERNO	2	2				
11	99530–10114	PASADOR, DE ESPIGA	2	2				
12	90465–08125	BRIDA	1	1				
13	93106–15034	SELLO ACEITE	1	1				
14	5PS–15419–00	CUBIERTA DE SELECCIONADOR	1	1				
15	91317–06014	PERNO	2	2				
16	91317–06010	PERNO	1	1				
17	91317–06020	PERNO	1	1				
18	90465–08034	BRIDA	1	1				
19	5PS–15420–10	TAPA DE CARTER LATERAL	1					
	5PS–15420–00	TAPA DE CARTER LATERAL		1				
20	5PS–15326–00	.AMORTIGUADOR 2	1	1				
21	5PS–15335–00	.AMORTIGUADOR 3	1	1				
22	5PS–15337–00	.COLLAR	1	1				
23	91314–06025	PERNO	1	1				
24	91314–06050	PERNO	4	4				
25	5PS–15431–10	CUBIERTA DE CARTER 3	1					

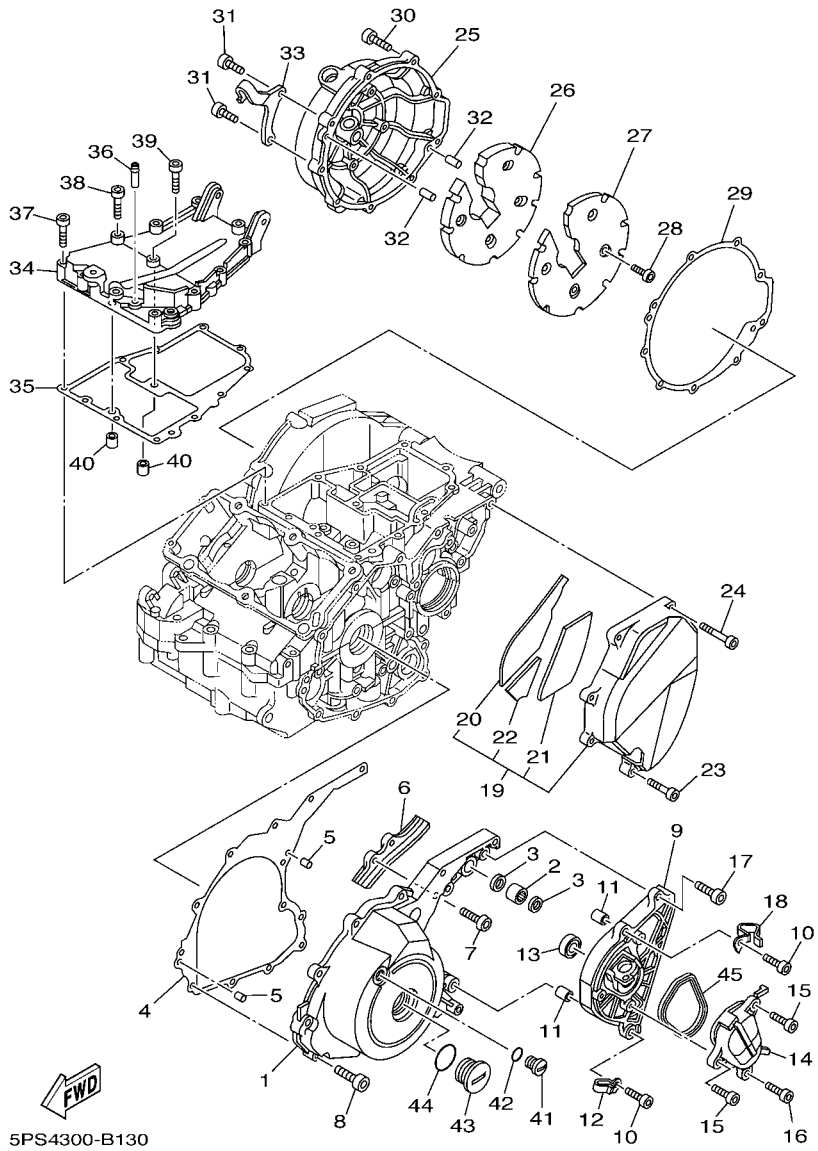

FIG. 13 CUBIERTA DE CARTER 1

REF. Nº	CODIGO Nº	DESCRIPCION	2B04	2B05				OBSERVACIONES
25	5PS–15431–00	CUBIERTA DE CARTER 3		1				
26	5PS–15316–00	AMORTIGUADOR 1	1	1				
27	5PS–15427–00	CUBIERTA DE TAPA 2	1	1				
28	90149–05009	TORNILLO DE REGLAJE	4	4				
29	5PS–15462–02	EMPAQ CUBIERTA DE CARTER 3	1	1				
30	91314–06025	PERNO	7	7				
31	91314–06030	PERNO	2	2				
32	99530–08012	PASADOR, DE ESPIGA	2	2				
33	5PS–15441–00	SOSTEN DE CABLE DE EMBRAGUE	1	1				
34	5PS–15425–10	CUBIERTA DE GENERADOR 2	1					
	5PS–15425–00	CUBIERTA DE GENERADOR 2		1				
35	5PS–15463–02	EMPAQ CUBIERTA DEL CARTER 2	1	1				
36	583–11126–00	TUBO RESPIRADERO 3	1	1				
37	91380–06035	PERNO	10	10				
38	90110–06006	TORNILLO ALLEN	1	1				
39	91317–06045	PERNO	1	1				
40	99530–10114	PASADOR, DE ESPIGA	2	2				
41	90340–14013	TORNILLO, DE DRENAJE	1					
	90340–14128	TORNILLO, DE DRENAJE		1				
42	93210–14369	ANILLO O	1	1				
43	90340–32004	TORNILLO, DE DRENAJE	1					
	90340–32123	TORNILLO, DE DRENAJE		1				
44	93210–32172	ANILLO O	1	1				
45	5PS–8338L–00	EMPAQUE	1	1				

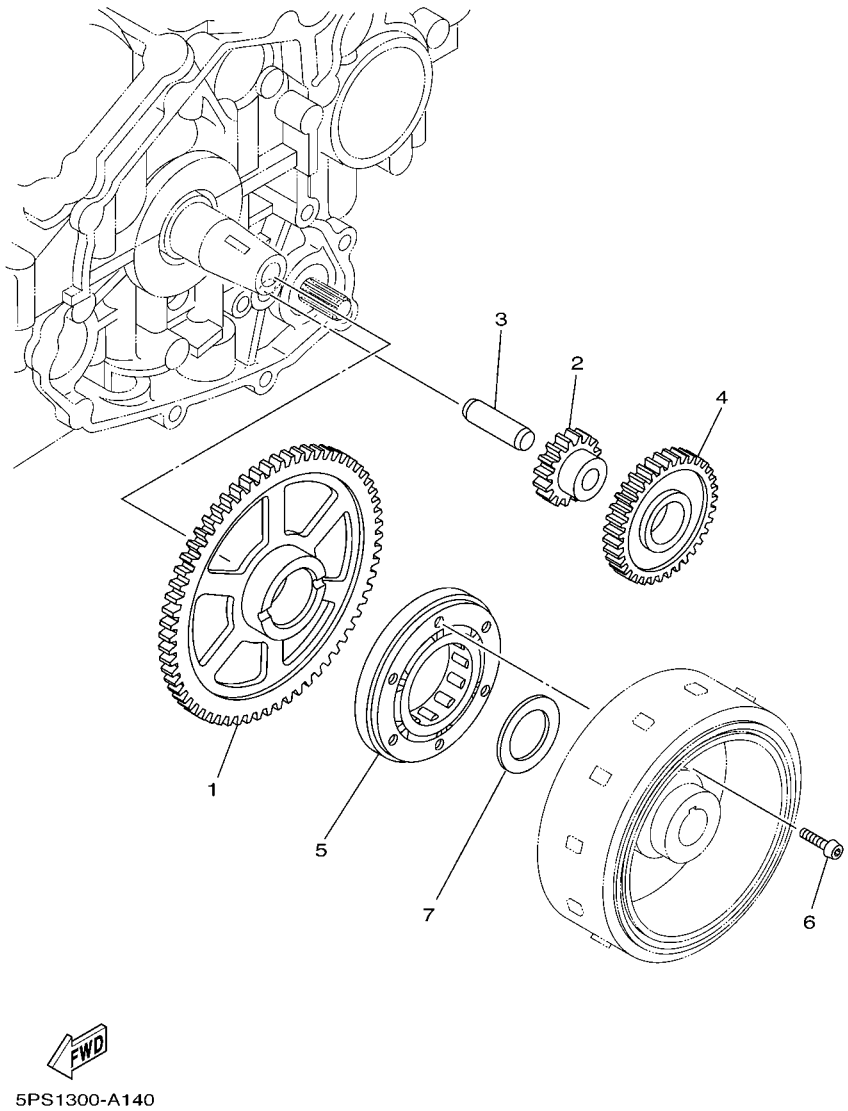

FIG. 14 EMBRAGUE DEL ARRANQUE

REF. Nº	CODIGO Nº	DESCRIPCION	2B04	2B05				OBSERVACIONES
1	5PS–15515–00	ENGRANAJE 3	1	1				
2	3LD–15517–00	ENGRENAJE POSICION 2DA	1	1				
3	26H–15521–00	EJE 1	1	1				
4	3LD–15512–00	ENGRENAJE NEUTRO	1	1				
5	3LD–15590–02	ENSAMBLE GUIA CADENA ARRANQUE	1	1				
6	90149–06026	TORNILLO DE REGLAJE	3	3				
7	90201–30008	ARANDELA PLANA	1	1				

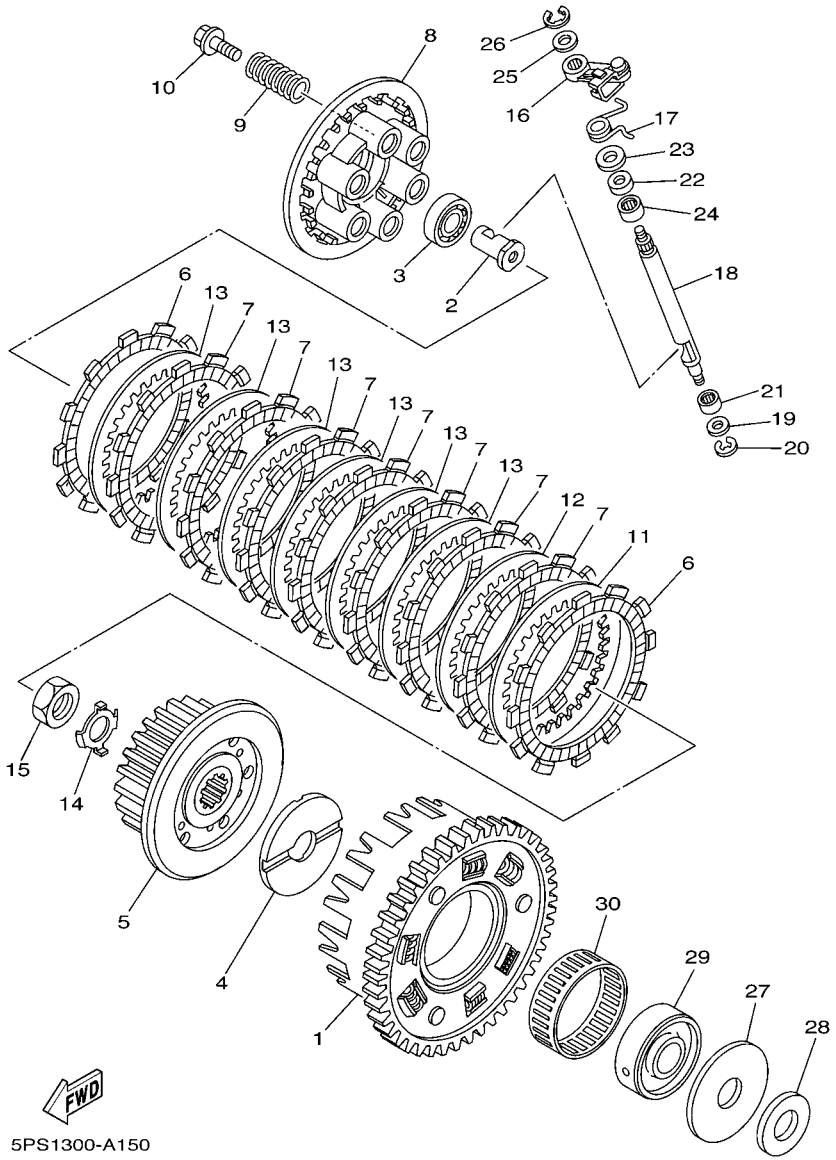

FIG. 15 EMBRAGUE

REF. Nº	CODIGO Nº	DESCRIPCION	2B04	2B05				OBSERVACIONES
1	4TX–16150–02	CAMPANA DE EMBRAGUE	1	1				
2	5PS–16356–00	VARILLA DE EMPUJE 1	1	1				
3	93306–00304	COJINETE	1	1				
4	4H7–16154–00	ARANDELA, DE EMPUJE 1	1	1				
5	4TX–16371–00	CUBO, DE EMBRAGUE	1	1				
6	4H7–16321–02	PLACA DE FRICCION	2	2				
7	4TX–16321–00	PLACA DE FRICCION	7	7				
8	5EB–16351–01	PLATO DE PRESION	1	1				
9	90501–230E4	RESORTE DE COMPRESION	6	6				
10	90159–06123	TORNILLO CON VALONA	6	6				
11	3J2–16324–00	DISCO, DE EMBRAGUE (T=2.0)	1	1				UR
	168–16325–00	DISCO, DE EMBRAGUE (T=1.6)	1	1				UR
	168–16324–00	DISCO, DE EMBRAGUE (T=2.3)	1	1				UR
12	3J2–16324–00	DISCO, DE EMBRAGUE (T=2.0)	1	1				UR
	168–16324–00	DISCO, DE EMBRAGUE (T=2.3)	1	1				UR
13	3J2–16324–00	DISCO, DE EMBRAGUE (T=2.0)	6	6				
14	90215–20004	ARANDELA DE CIERRE	1	1				
15	90170–20008	TUERCA	1	1				
16	5PS–16340–00	PALANCA DE EMPUJE COMPLETA	1	1				
17	90508–14012	RESORTE DE TORSION	1	1				
18	5PS–16382–00	EJE DE PALANCA DE EMPUJE	1	1				
19	92907–08600	ARANDELA	1	1				
20	99001–07600	PRESILLA REDONDA	1	1				
21	93317–11096	COJINETE	1	1				
22	93102–12106	SELLO ACEITE (SD 12-22-5 HS)	1	1				
23	90201–12163	ARANDELA PLANA	1	1				
24	93317–11287	COJINETE	1	1				

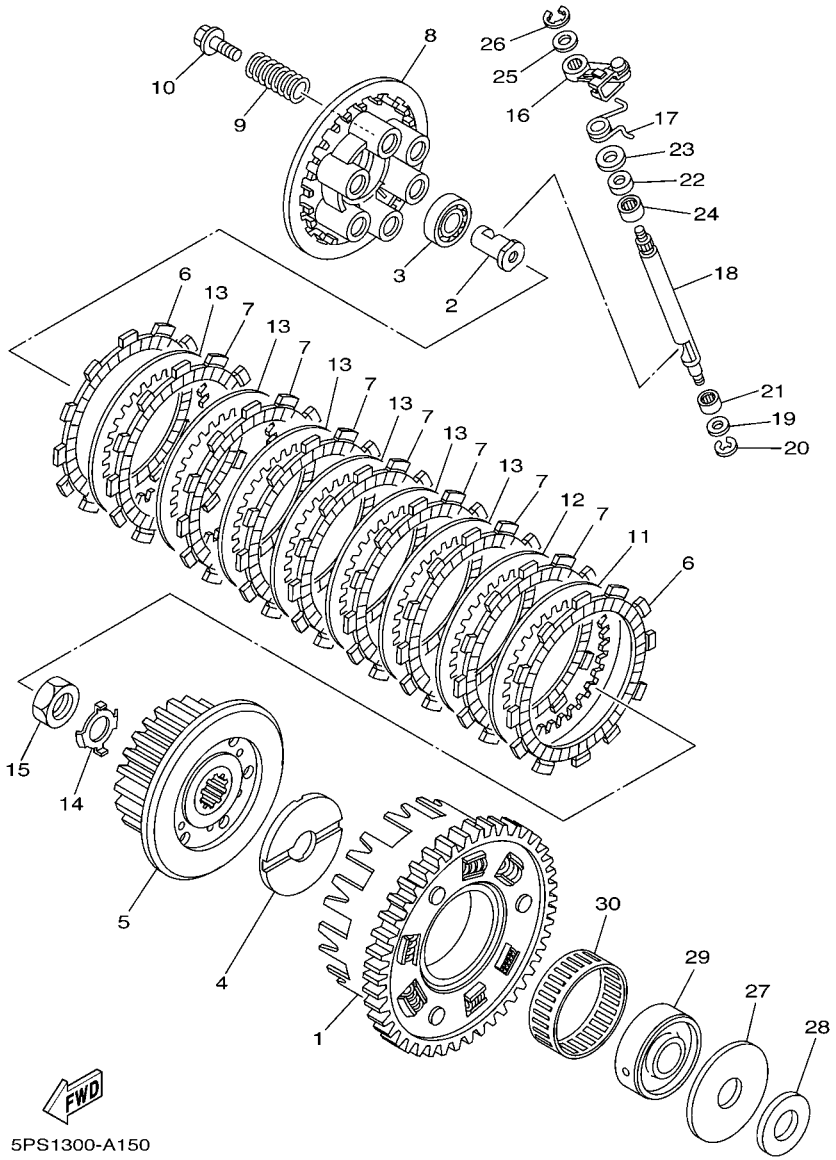

FIG. 15 EMBRAGUE

REF. Nº	CODIGO Nº	DESCRIPCION	2B04	2B05				OBSERVACIONES
25	90201–10119	ARANDELA PLANA	1	1				
26	99009–10400	PRESILLA REDONDA	1	1				
27	3VD–16164–00	PLACA DE EMPUJE 2	1	1				
28	3VD–16154–00	ARANDELA, DE EMPUJE 1	1	1				
29	4NX–16181–00	SEPARADOR	1	1				
30	93310–365B8	COJINETE DE RODILLOS	1	1				

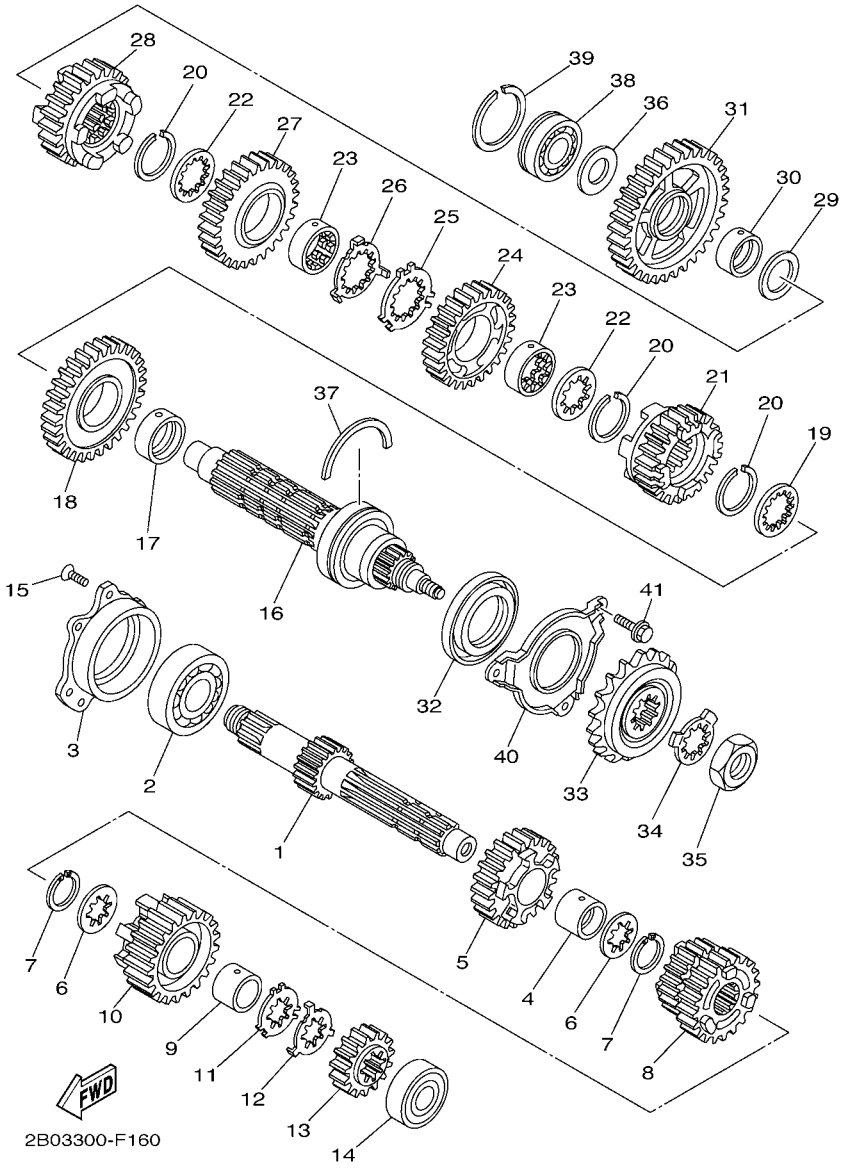

FIG. 16 TRANSMISION

REF. Nº	CODIGO Nº	DESCRIPCION	2B04	2B05				OBSERVACIONES
1	5PS–17401–00	EJE PRINCIPAL COMPLETO (12T)	1	1				
2	93306–30534	COJINETE	1	1				
3	5PS–15163–00	CAJA DE COJINETE 1	1	1				
4	90387–25004	ESPACIADOR	1	1				
5	5PS–17151–00	ENGRANAJE, PINION DE 5TA(25T)	1	1				
6	90209–21332	ARANDELA DE SEPARACION	2	2				
7	93440–25084	SEGURO	2	2				
8	5PS–17131–00	ENGRANAJE PINON 3/4 (22T/25T)	1	1				
9	90387–2513E	ESPACIADOR	1	1				
10	5PS–17161–00	ENGRANAJE PINON 6TA (26T)	1	1				
11	90209–22352	ARANDELA DE SEPARACION	1	1				
12	90209–21351	ARANDELA DE SEPARACION	1	1				
13	5PS–17121–00	ENGRANAJE, PINION DE 2DA (13T)	1	1				
14	93306–20464	COJINETE	1	1				
15	90151–06011	TORNILLO EMBUTIDO	3	3				
16	5PS–17402–00	EJE DE TRACCION COMPLETO	1	1				
17	90387–32003	ESPACIADOR	1	1				
18	5PS–17221–00	ENGRANAJE RUEDA DE 2DA (37T)	1	1				
19	90209–28331	ARANDELA DE SEPARACION	1	1				
20	93440–31183	SEGURO	3	3				
21	5PS–17261–00	ENGRANAJE RUEDA DE 6TA (24T)	1	1				
22	90209–28331	ARANDELA DE SEPARACION	2	2				
23	90387–2802W	ESPACIADOR	2	2				
24	5PS–17241–00	ENGRANAJE DE RUEDA 4TA (31T)	1	1				
25	90209–29329	ARANDELA DE SEPARACION	1	1				
26	90209–28330	ARANDELA DE SEPARACION	1	1				
27	5PS–17231–00	ENGRANAJE, RUEDA DE 3RA (34T)	1	1				

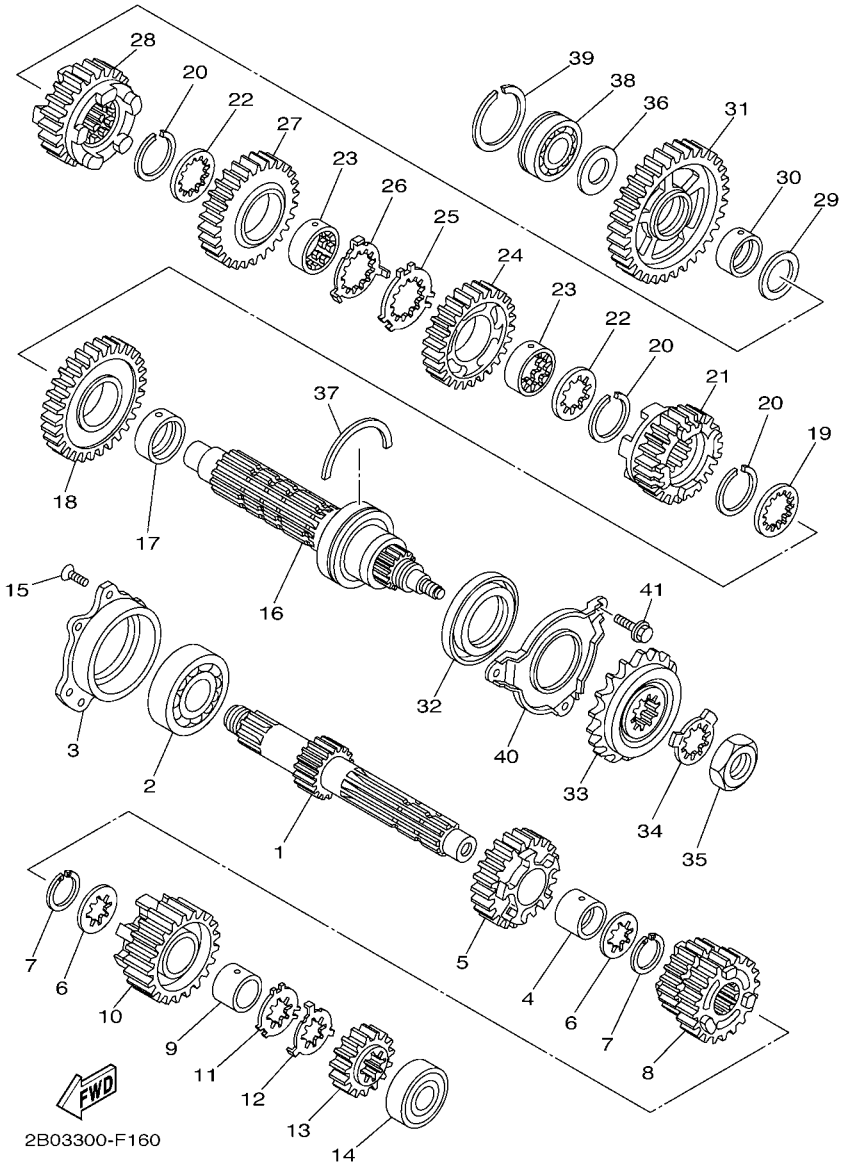

FIG. 16 TRANSMISION

REF. Nº	CODIGO Nº	DESCRIPCION	2B04	2B05				OBSERVACIONES
28	5PS–17251–00	ENGRANAJE, RUEDA DE 5TA (26T)	1	1				
29	90201–25M72	ARANDELA PLANA	1	1				
30	90387–2511A	ESPACIADOR	1	1				
31	5PS–17211–00	ENGRANAJE RUEDA DE 1 RA (33T)	1	1				
32	93102–40008	SELLO ACEITE	1	1				
33	5PS–17460–00	CORONA (16T)	1	1				
34	90215–30233	ARANDELA DE CIERRE	1	1				
35	90179–22011	TUERCA	1	1				
36	90201–20008	ARANDELA PLANA	1	1				
37	278–17424–01	PRESILLA REDONDA 1	1	1				
38	93306–20455	COJINETE	1	1				
39	93440–45144	SEGURO	1	1				
40	5PS–17471–00	PLACA, DE CUBIERTA	1	1				
41	95827–06012	TORNILLO	3	3				

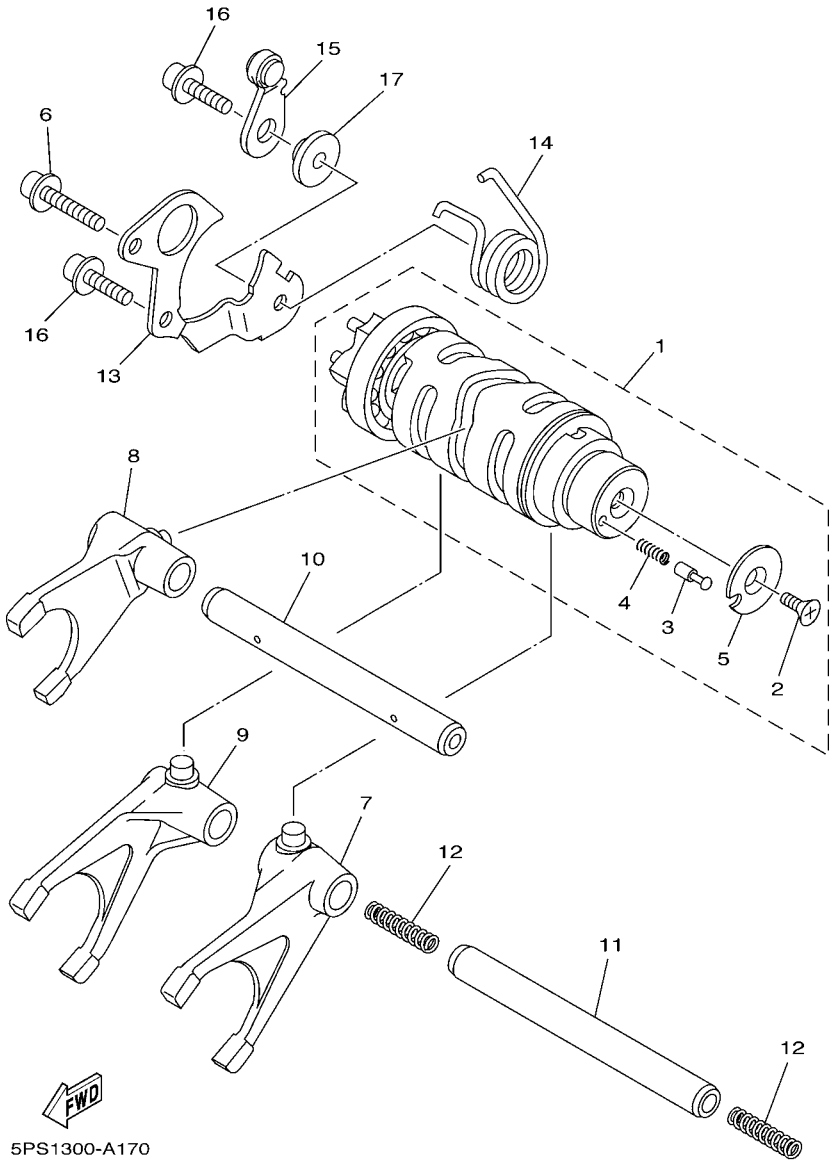

FIG. 17 LEVA DE CAMBIO & HORQUILLA

REF. Nº	CODIGO Nº	DESCRIPCION	2B04	2B05				OBSERVACIONES
1	5PS–18540–00	LEVA DEL CAMBIO COMPLETA	1	1				
2	90149–05321	.TORNILLO DE REGLAJE	1	1				
3	4UN–18542–00	.PUNTO MUERTO	1	1				
4	90501–06022	.RESORTE DE COMPRESION	1	1				
5	4UN–18566–00	.PLACA LATERAL 2	1	1				
6	90110–06060	TORNILLO ALLEN	1	1				
7	5PS–18511–00	HORQUILLA DEL CAMBIO 1	1	1				
8	5PS–18512–00	HORQUILLA DEL CAMBIO 2	1	1				
9	5PS–18513–00	HORQUILLA DEL CAMBIO 3	1	1				
10	5PS–18531–00	BARRA GUIA HORQ. CAMBIO 1	1	1				
11	4XV–18531–00	BARRA GUIA HORQ. CAMBIO 1	1	1				
12	90501–064L1	RESORTE DE COMPRESION	2	2				
13	3LD–18536–00	TOPE DE PALANCA SELECTOR	1	1				
14	90508–29016	RESORTE DE TORSION	1	1				
15	4SV–18140–00	PALANCA DE TOPE COMPLETA	1	1				
16	90110–06027	TORNILLO ALLEN	2	2				
17	4NX–18175–00	ESPACIADOR	1	1				

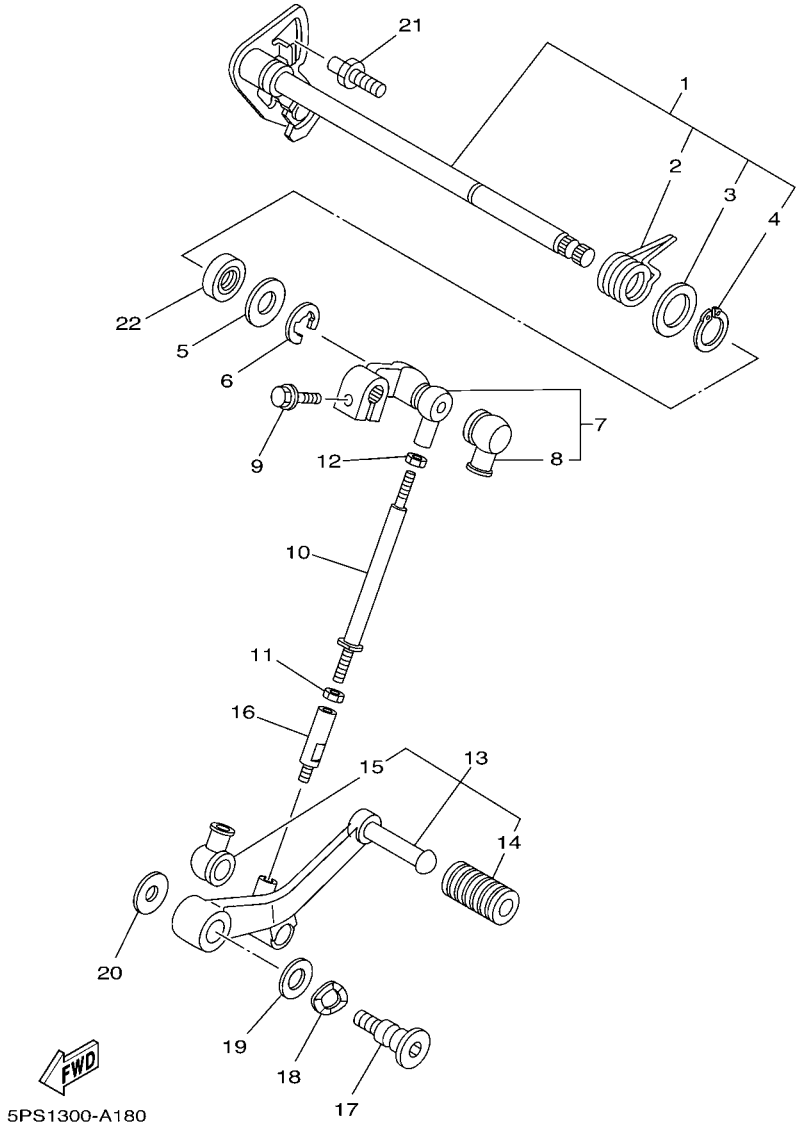

FIG. 18 EJE DE CAMBIO & PEDAL

REF. Nº	CODIGO Nº	DESCRIPCION	2B04	2B05				OBSERVACIONES
1	5PS–18101–00	EJE SELECTOR COMPLETO	1	1				
2	90508–32682	.RESORTE DE TORSION	1	1				
3	90201–191J4	.ARANDELA PLANA	1	1				
4	99009–19400	.PRESILLA REDONDA	1	1				
5	90201–12575	ARANDELA PLANA	1	1				
6	99001–10600	PRESILLA REDONDA	1	1				
7	5PS–18130–00	EJE DE CAMBIO COMPLETO	1	1				
8	2H9–18154–00	.CUBIERTA GUARDAPOLVO	1	1				
9	95827–06020	TORNILLO	1	1				
10	2H9–18115–00	VARILLA DEL CAMBIO	1	1				
11	90170–06228	TUERCA	1	1				
12	95304–06700	TUERCA	1	1				
13	5PS–18110–00	PEDAL DE CAMBIO COMPLETO	1	1				
14	5EB–18113–00	.FUNDA DEL PEDAL DEL CAMBIO	1	1				
15	2H9–18154–00	.CUBIERTA GUARDAPOLVO	1	1				
16	5PS–18116–00	VARILLA DE CONECTOR 1	1	1				
17	5JW–27434–00	PERNO	1	1				
18	90206–12074	ARANDELA ONDULADA	1	1				
19	90201–12013	ARANDELA PLANA	1	1				
20	90201–080H1	ARANDELA PLANA	1	1				
21	1D7–18127–00	PASADOR DE PALANCA	1	1				
22	93101–12004	SELLO ACEITE	1	1				

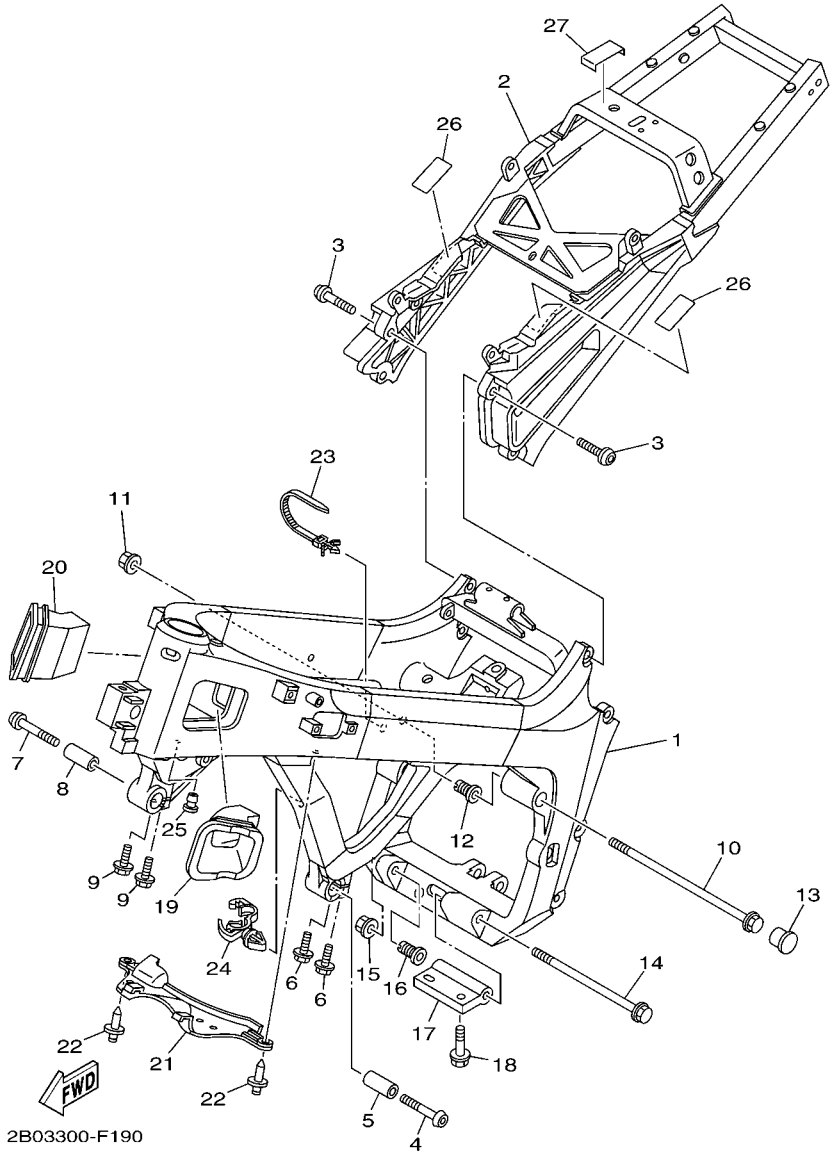

FIG. 19 CUADRO

REF. Nº	CODIGO Nº	DESCRIPCION	2B04	2B05				OBSERVACIONES
1	2B0–21110–20	ARMAZON COMPLETO	1					
	2B0–21110–40	ARMAZON COMPLETO		1				
2	5PS–21190–11	CUADRO TRASERO COMPLETA	1					
	5PS–21190–21	CUADRO TRASERO COMPLETA		1				
3	90149–10002	TORNILLO DE REGLAJE	4	4				
4	90111–12001	TORNILLO	1	1				
5	90387–14003	ESPACIADOR	1	1				
6	90105–08047	TORNILLO	2	2				
7	90111–12001	TORNILLO	1	1				
8	90387–14003	ESPACIADOR	1	1				
9	90105–08047	TORNILLO	2	2				
10	90105–10032	TORNILLO	1	1				
11	90179–10002	TUERCA	1	1				
12	4C8–21495–00	PERNO DE AJUSTE	1	1				
13	90338–24112	TAPON	1	1				
14	90105–10113	TORNILLO	1	1				
15	90179–10696	TUERCA	1	1				
16	4C8–21495–00	PERNO DE AJUSTE	1	1				
17	5PS–21489–00	SOPORTE INFERIOR DE MOTOR	1	1				
18	95817–08030	TORNILLO	2	2				
19	5PS–2117V–00	CUBIERTA 7	1	1				
20	5PS–2117W–00	CUBIERTA 8	1	1				
21	5PS–2117M–00	CUBIERTA	1	1				
22	90269–07001	REMACHE	2	2				
23	90464–12089	BRIDA	1	1				
24	90464–13249	BRIDA	1	1				
25	90338–08008	TAPON	1	1				

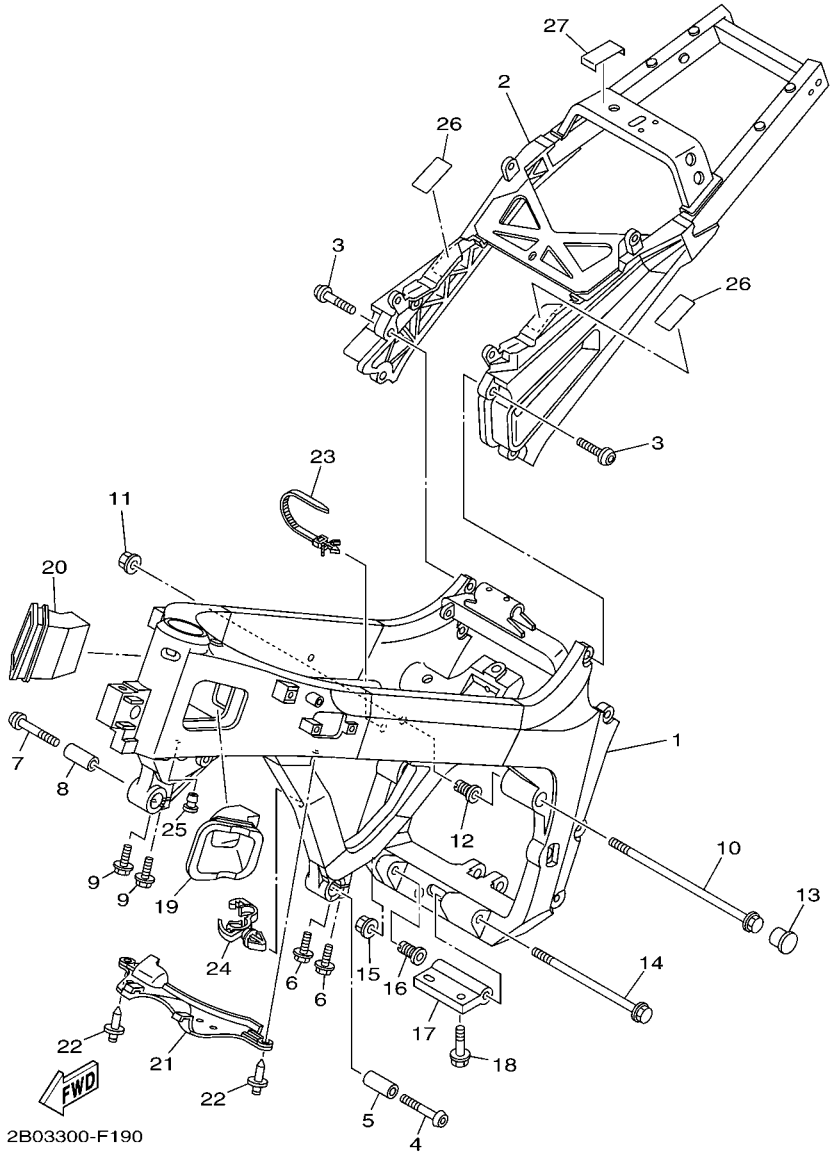

FIG. 19 CUADRO

REF. Nº	CODIGO Nº	DESCRIPCION	2B04	2B05				OBSERVACIONES
26	1JK–21268–00	SELLO	2	2				
27	1B3–2117G–00	PROTECTOR	2	2				

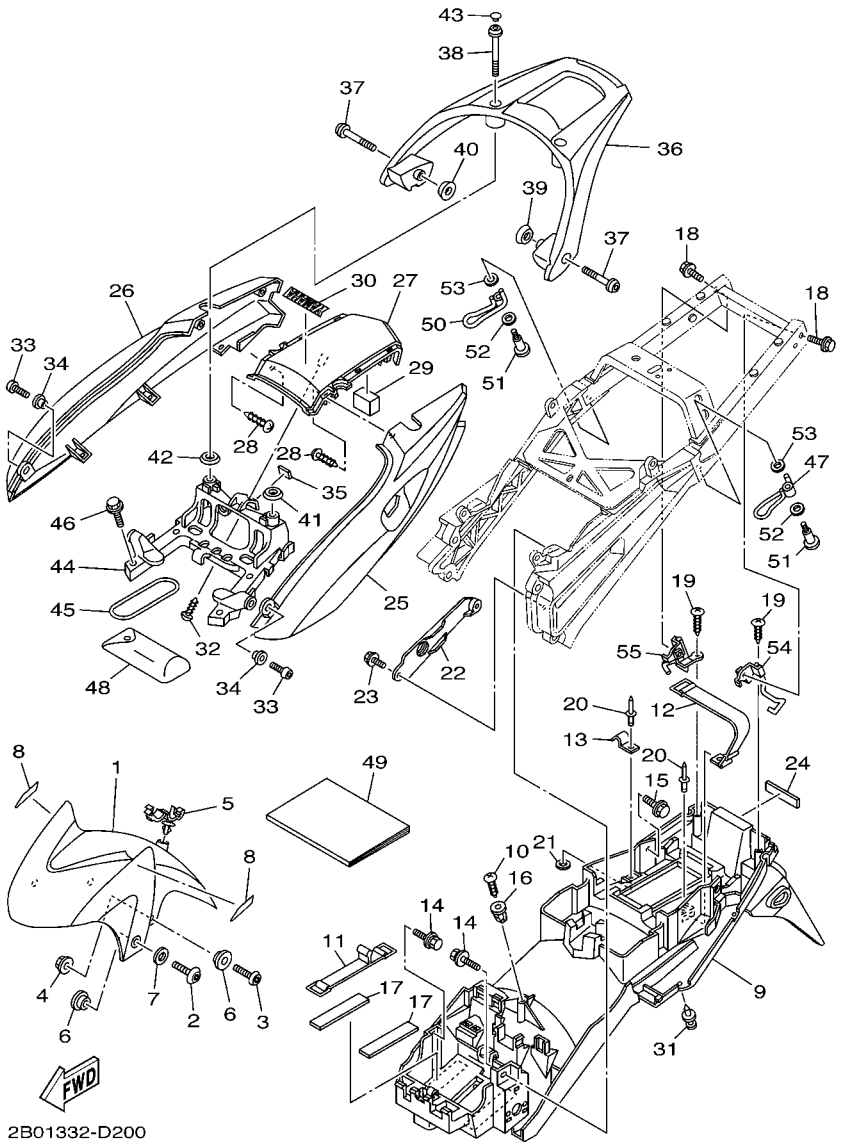

FIG. 20 GUARDABARRO

REF. Nº	CODIGO Nº	DESCRIPCION	2B04	2B05				OBSERVACIONES
1	5PS–21511–00–P6	GUARDABARRO DELANTERO	1					UR PARA SMX
	5PS–21511–00–P1	GUARDABARRO DELANTERO	1	1				UR S3 PARA DRMK
2	90110–06200	TORNILLO ALLEN	2	2				
3	92014–06020	PERNO	2	2				
4	90179–06009	TUERCA	2	2				
5	90464–18002	BRIDA	1	1				
6	90387–065T2	ESPACIADOR	4	4				
7	90202–06170	ARANDELA DE PLANA	2	2				
8	5VS–21578–10	EMBLEMA	2	2				
9	2B0–21611–00	GUARDABARRO TRASERO	1	1				
10	97707–60020	TORNILLO ROSCA HEMBRA	1	1				
11	3VD–82131–00	TIRANTE DE BATERIA	1	1				
12	5JW–21647–01	BANDA	1	1				
13	5PS–2162A–00	GANCHO	1	1				
14	90119–06108	TORNILLO CON ARANDELA	2	2				
15	90119–06118	TORNILLO CON ARANDELA	2	2				
16	90338–08226	TAPON	1	1				
17	1AE–2834E–00	AMORTIGUADOR 1	2	2				
18	90105–06020	TORNILLO	2	2				
19	97707–50020	TORNILLO ROSCA HEMBRA	2	2				
20	90267–40110	REMACHE CIEGO	2	2				
21	90201–04018	ARANDELA PLANA	1	1				
22	5PS–2163A–00	CUBIERTA TRAS GUARDABARRO 1	1	1				
23	90119–05062	TORNILLO CON ARANDELA	2	2				
24	5PS–21639–00	AMORTIGUADOR 2	1	1				
25	5PS–2471K–00–P6	CUBIERTA, DE COLA 1	1					UR PARA SMX
	5PS–2471K–00–P8	CUBIERTA, DE COLA 1	1					UR PARA DRMK

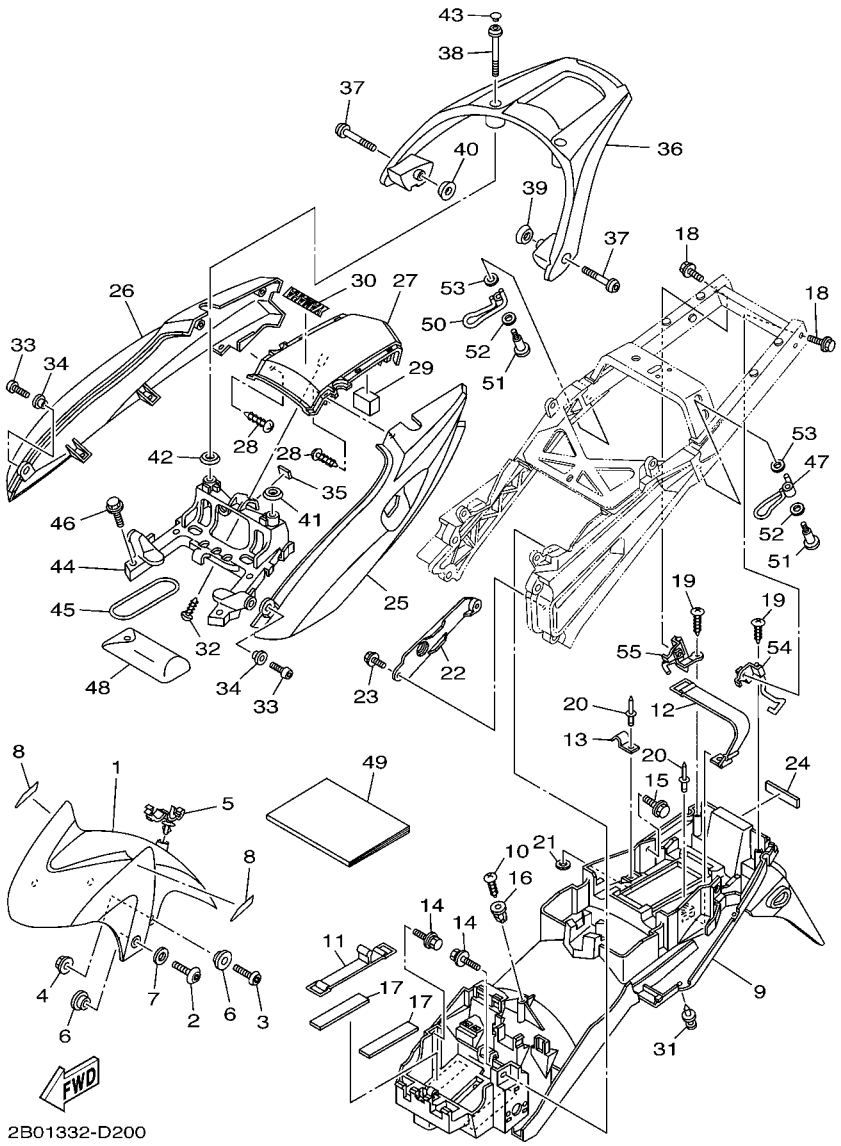

FIG. 20 GUARDABARRO

REF. Nº	CODIGO Nº	DESCRIPCION	2B04	2B05				OBSERVACIONES
25	5PS–2471K–00–P1	CUBIERTA, DE COLA 1		1				PARA S3
26	5PS–2472K–00–P6	CUBIERTA, DE COLA 2	1					UR PARA SMX
	5PS–2472K–00–P8	CUBIERTA, DE COLA 2	1					UR PARA DRMK
	5PS–2472K–00–P1	CUBIERTA, DE COLA 2		1				PARA S3
27	5PS–21651–00–P6	TAPA DE GUARDABARRO TRAS.	1					UR PARA SMX
	5PS–21651–00–P9	TAPA DE GUARDABARRO TRAS.	1					UR PARA DRMK
	5PS–21651–00–P1	TAPA DE GUARDABARRO TRAS.		1				PARA S3
28	97707–50012	TORNILLO	4	4				
29	5PS–21649–00	AMORTIGUADOR	1	1				
30	99247–00080	EMBLEMA, YAMAHA	1	1				UR PARA SMX
	99246–00080	EMBLEMA, YAMAHA	1					UR PARA DRMK
31	90269–06081	REMACHE	6	6				
32	97707–50014	TORNILLO	1	1				
33	92017–06014	PERNO	2	2				
34	90387–06048	ESPACIADOR	2	2				
35	51Y–21639–00	AMORTIGUADOR 2	1	1				
36	5PS–24773–10	MANIJA DE ASIENTO	1					
	5PS–24773–20	MANIJA DE ASIENTO		1				
37	90111–08005	TORNILLO	2	2				
38	90111–08006	TORNILLO	2	2				
39	5PS–24723–00	AMORTIGUADOR DE ASIENTO	1	1				
40	5PS–24724–00	AMORTIGUADOR DE ASIENTO	1	1				
41	5PS–24723–10	AMORTIGUADOR DE ASIENTO	1	1				
42	5PS–24724–10	AMORTIGUADOR DE ASIENTO	1	1				
43	90338–08163	TAPON	2	2				
44	5PS–2117E–00	SOPORTE DE LANTERNA TRAZERA	1	1				
45	4XV–21376–00	BANDA DE HERRAMIENTA	1	1				

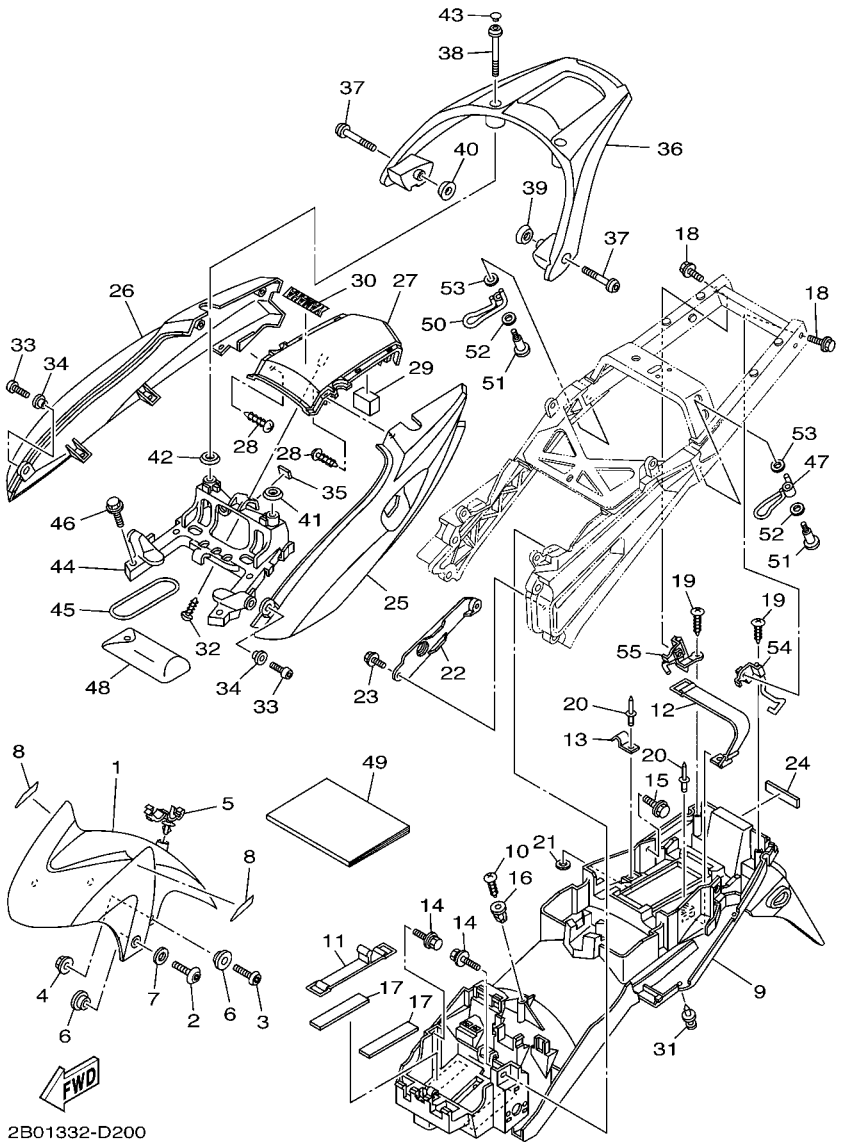

2B01332-D200

FIG. 20 GUARDABARRO

REF. Nº	CODIGO Nº	DESCRIPCION	2B04	2B05				OBSERVACIONES
46	95827–08035	TORNILLO	4	4				
47	5PS–21654–00	CABLE	1	1				
48	5PS–28100–01	JUEGO DE HERRAMIENTAS	1	1				
49	2B0–28199–S2	MANUAL DEL PROPRIETARIO	1	1				
50	5PS–21654–10	CABLE	1	1				
51	90109–06046	PERNO	2	2				
52	90206–08051	ARANDELA ONDULADA	2	2				
53	90201–06043	ARANDELA PLANA	2	2				
54	5PS–2132F–00	GANCHO	1	1				
55	5PS–2139E–00	GANCHO 2	1	1				

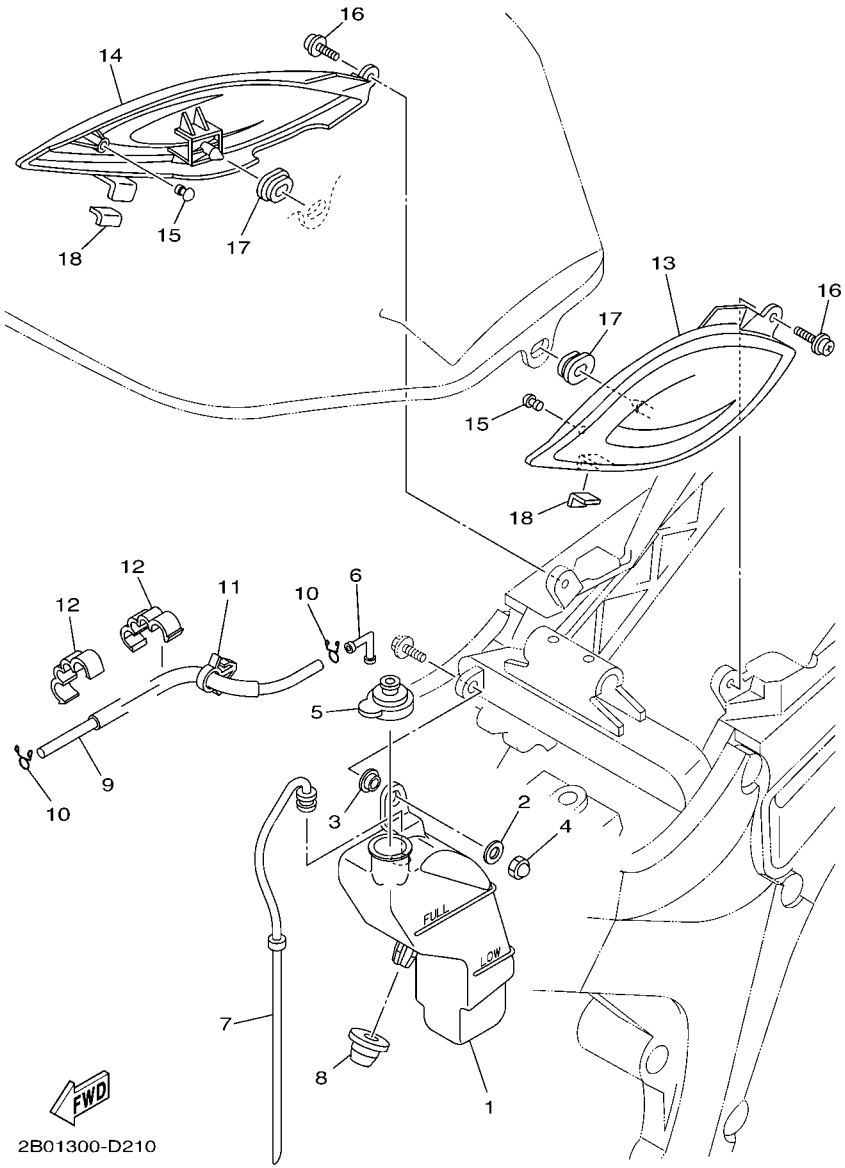

FIG. 21 CUBIERTA LATERAL

REF. Nº	CODIGO Nº	DESCRIPCION	2B04	2B05				OBSERVACIONES
1	2B0–21871–00	TANQUE DE RECUPERACION	1	1				
2	90201–08455	ARANDELA PLANA	1	1				
3	90387–08038	ESPACIADOR	1	1				
4	90176–08063	TUERCA CORONA	1	1				
5	5EB–21875–00	TAPA	1	1				
6	26H–21828–00	CODO	1	1				
7	2B0–21816–00	TUBO 1	1	1				
8	2B0–21719–00	ANILLO PROTECTOR	1	1				
9	90445–08023	TUBO	1	1				
10	90467–08075	PRESILLA	2	2				
11	90464–15157	BRIDA	1	1				
12	90464–10233	BRIDA	2	2				
13	5PS–21711–00	CUBIERTA LATERAL 1	1	1				
14	5PS–21721–00	CUBIERTA LATERAL 2	1	1				
15	1J7–21717–00	AMORTIGUADOR	2	2				
16	90159–06033	TORNILLO CON VALONA	2	2				
17	90480–01558	TAPON	2	2				
18	3TB–28217–00	AMORTIGUADOR 1	2	2				

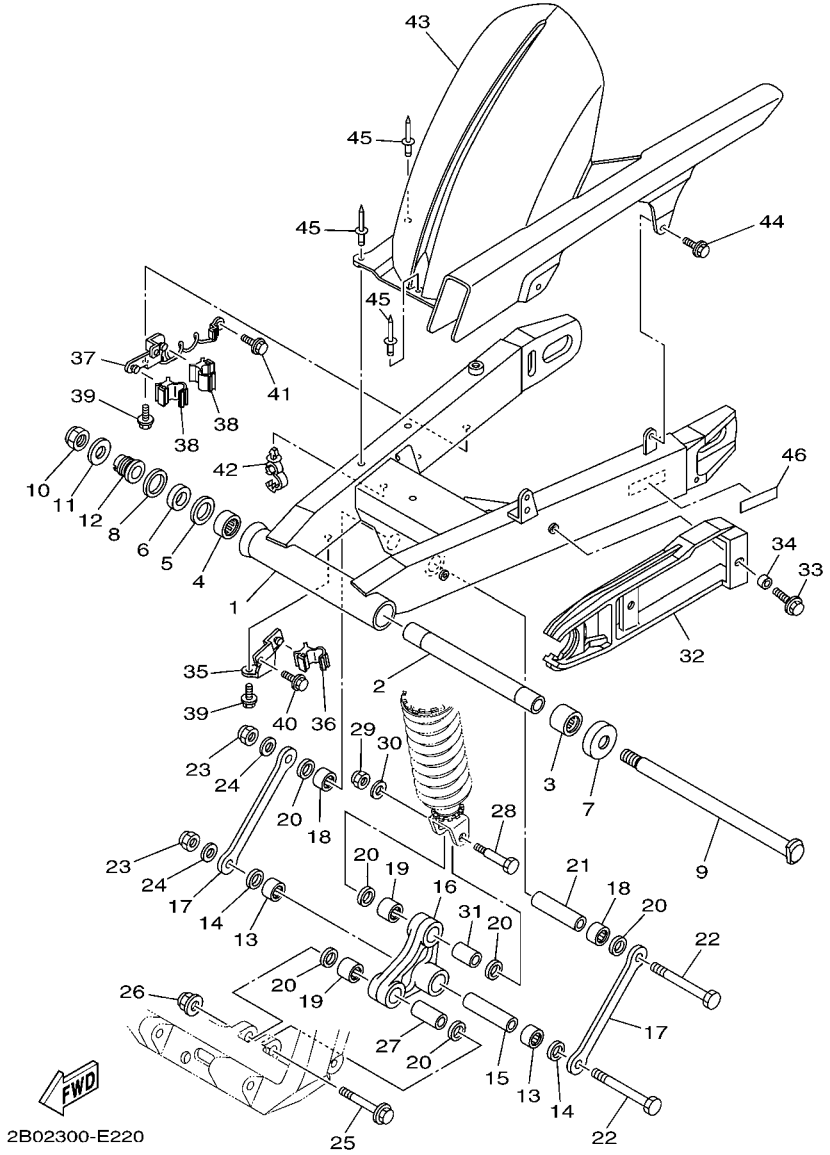

FIG. 22 BRAZO TRASERO

REF. Nº	CODIGO Nº	DESCRIPCION	2B04	2B05				OBSERVACIONES
1	5PS–22110–10	BRAZO TRASERO COMPLETO	1					
	5PS–22110–20	BRAZO TRASERO COMPLETO		1				
2	5PS–22184–00	BUJE	1	1				
3	93315–42523	COJINETE DE RODILLOS	1	1				
4	93315–42536	COJINETE DE RODILLOS	1	1				
5	5EB–22127–00	CUNA	1	1				
6	5EB–22123–00	BUJE 1	1	1				
7	3FV–22128–00	TAPA DE EMPIJE 1	1	1				
8	93109–33049	SELLO ACEITE	1	1				
9	5PS–22141–00	EJE DEL BARCULANTE	1	1				
10	90185–18167	TUERCA AUTOBLOCANTE	1	1				
11	90201–186M4	ARANDELA PLANA	1	1				
12	5PS–22125–00	PERNO	1	1				
13	93317–21746	COJINETE	2	2				
14	93109–17071	SELLO ACEITE	2	2				
15	90387–126Y1	ESPACIADOR	1	1				
16	5PS–2217A–00	BRAZO REEURIO	1	1				
17	5PS–2217M–00	BRAZO 1	2	2				
18	93317–21746	COJINETE	2	2				
19	93317–31771	COJINETE	2	2				
20	93109–17071	SELLO ACEITE	6	6				
21	90387–126Y1	ESPACIADOR	1	1				
22	90101–12749	TORNILLO	2	2				
23	90185–12119	TUERCA AUTOBLOCANTE	2	2				
24	92907–12600	ARANDELA	2	2				
25	90105–10323	TORNILLO	1	1				
26	95607–10200	TUERCA DE AUTO-CIERRE	1	1				

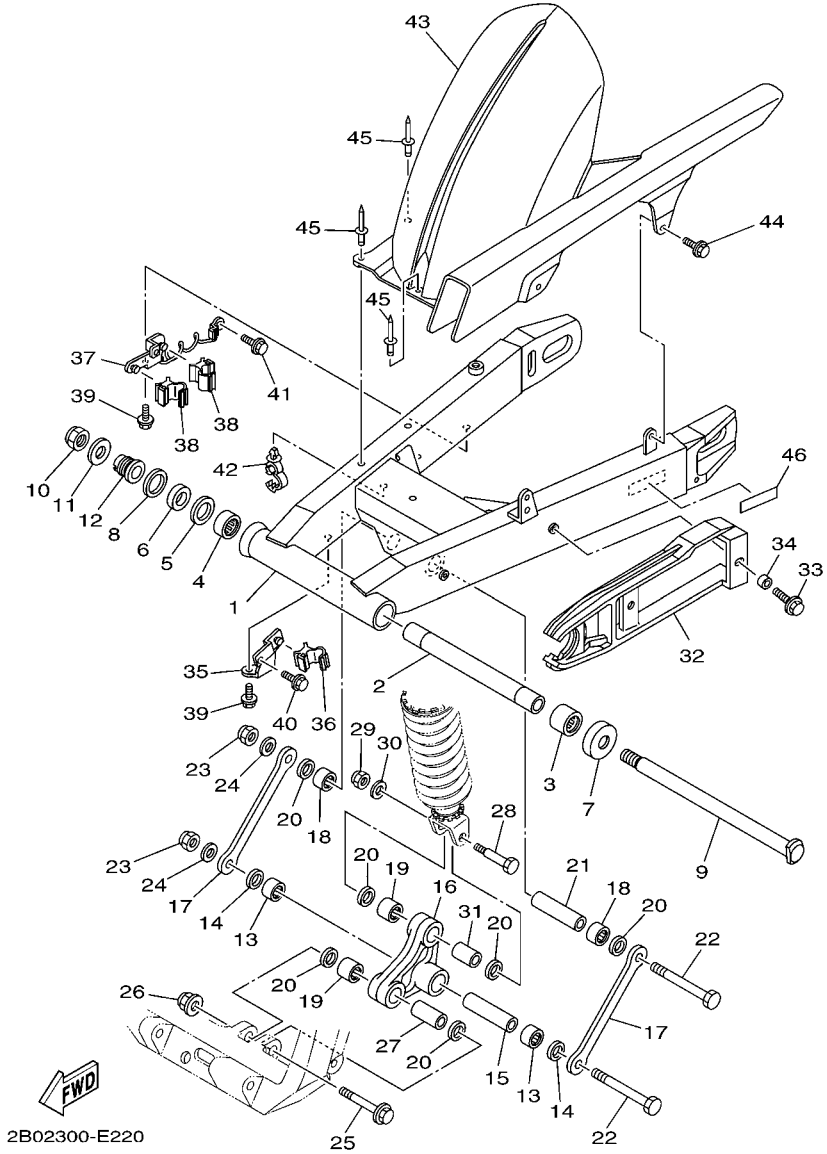

FIG. 22 BRAZO TRASERO

REF. Nº	CODIGO Nº	DESCRIPCION	2B04	2B05				OBSERVACIONES
27	90387–1012B	ESPACIADOR	1	1				
28	90101–10659	TORNILLO	1	1				
29	95617–10100	PERNO DE PUNTAL	1	1				
30	90201–101J1	ARANDELA PLANA	1	1				
31	90387–127W0	ESPACIADOR	1	1				
32	5PS–22151–00	SELLO DE GUARDA	1	1				
33	90119–06096	TORNILLO CON ARANDELA	2	2				
34	90387–06372	ESPACIADOR	2	2				
35	2B0–25887–00	SOPORTE DE MANGUERA FRENO	1	1				
36	90464–08189	BRIDA	1	1				
37	2B0–25886–00	SOPORTE DE MANGUERA FRENO	1	1				
38	90464–08189	BRIDA	2	2				
39	95027–06016	PERNO, DE BRIDA	2	2				
40	95027–06010	PERNO, DE BRIDA	1	1				
41	95027–06010	PERNO, DE BRIDA	2	2				
42	90464–18002	BRIDA	2	2				
43	5PS–21650–00	GUARDABARRO TRANSERO COMP.	1	1				
44	90119–06117	TORNILLO CON ARANDELA	2	2				
45	90269–08001	REMACHE	3	3				
46	5PS–21668–00	ETIQUETA DE FRANJA	1	1				

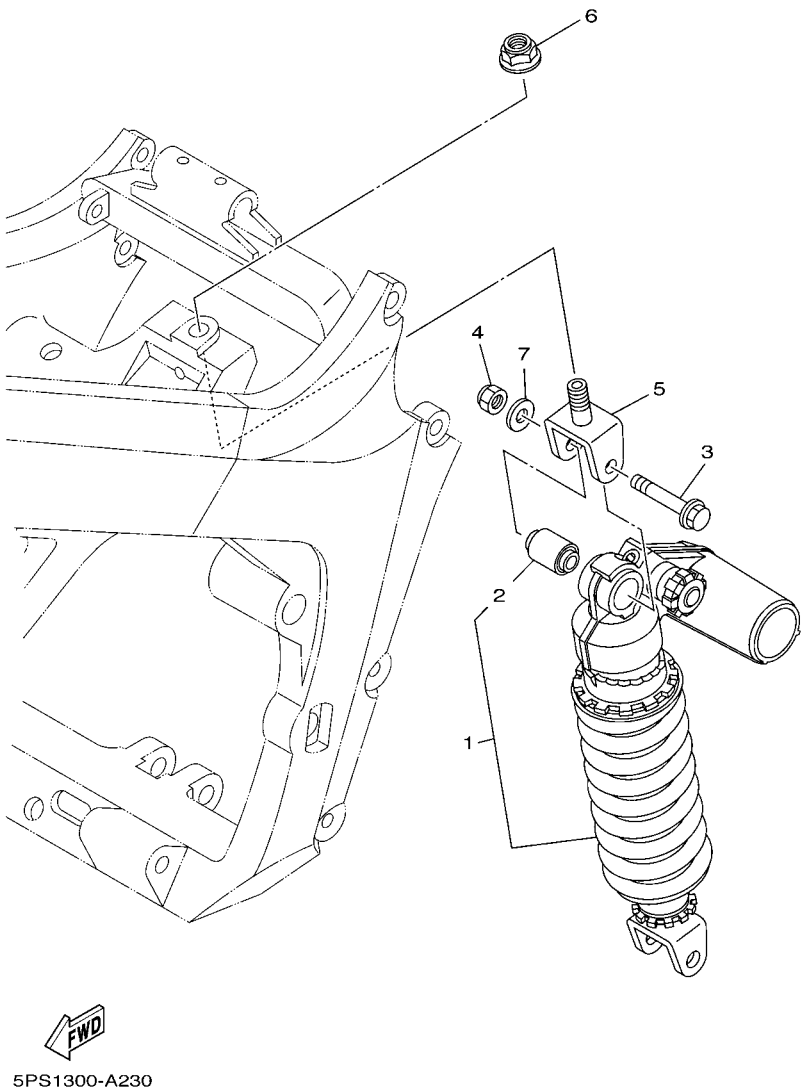

FIG. 23 SUSPENSION TRASERO

REF. Nº	CODIGO Nº	DESCRIPCION	2B04	2B05				OBSERVACIONES
1	5PS–22210–10	AMORTIGUADOR TRASERO COMPLETO	1					UR PARA SMX
	5PS–22210–20	AMORTIGUADOR TRASERO COMPLETO	1	1				UR PARA DRMK
2	4GY–22216–30	.BUJE DEL AMORTIGUADOR TRASERO	1	1				
3	90105–10402	TORNILLO	1	1				
4	95617–10100	PERNO DE PUNTAL	1	1				
5	5PS–22219–01	SOPORTE SUPERIOR	1	1				
6	95607–14200	TUERCA DE AUTO-CIERRE	1	1				
7	90201–101J1	ARANDELA PLANA	1	1				

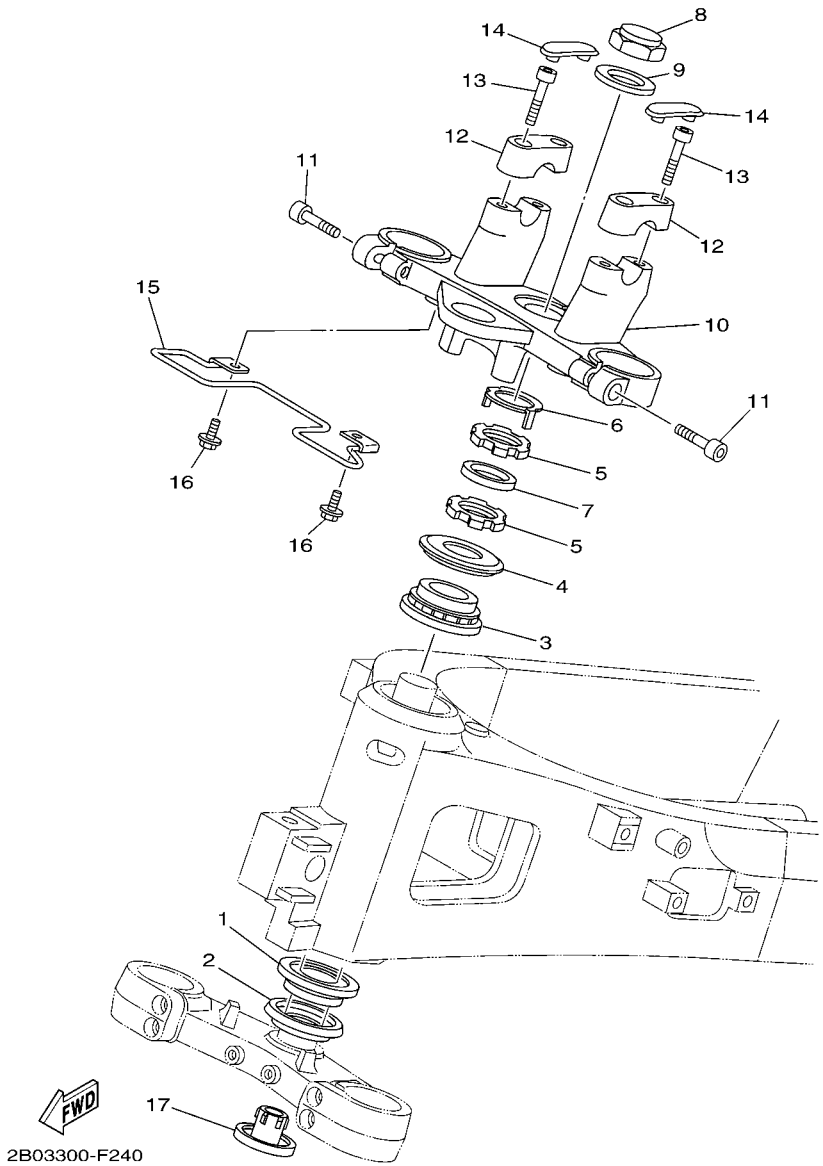

FIG. 24 DIRECCION

REF. Nº	CODIGO Nº	DESCRIPCION	2B04	2B05				OBSERVACIONES
1	93399–99932	COJINETE	1	1				
2	3FV–23462–00	SELLO PARA POLVO	1	1				
3	93399–99932	COJINETE	1	1				
4	4XV–23415–01	CUBIERTA DE PISTA DE BOLAS 1	1	1				
5	90179–30691	TUERCA	2	2				
6	5VY–23418–00	ARANDELA ESPECIAL	1	1				
7	90202–30235	ARANDELA DE PLANA	1	1				
8	90176–28083	TUERCA CORONA	1	1				
9	90201–281U8	ARANDELA PLANA	1	1				
10	5PS–23435–20	PLATINA SUPERIOR	1	1				
11	91314–08030	PERNO	2	2				
12	4H7–23441–01–98	SOPORTE DE MANUBRIO	2	2				LGB
13	91314–08030	PERNO	4	4				
14	12R–23469–00	TAPA DE PERNO	2	2				
15	2B0–23389–00	GUIA DE CABLE	1	1				
16	90119–06228	TORNILLO CON ARANDELA	2	2				
17	4KM–23123–01	CUBIERTA INFERIOR	1	1				

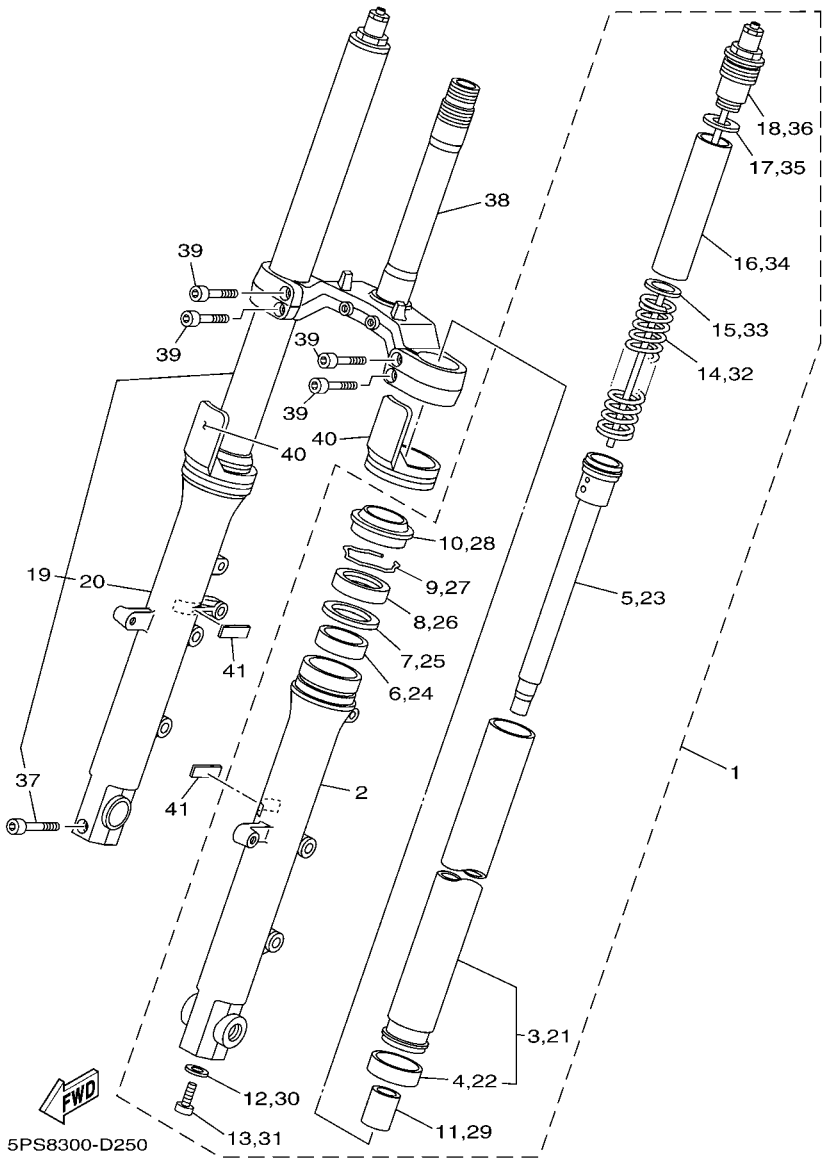

FIG. 25 HORQUILLA DELANTERA

REF. Nº	CODIGO Nº	DESCRIPCION	2B04	2B05				OBSERVACIONES
1	5PS–23102–30	HORQUILLA DELANTERA COMPL.(MI)	1					
	5PS–23102–40	HORQUILLA DELANTERA COMPL.(MI)		1				
2	5PS–23126–30	.TUBO EXTERIOR (IZQUIERDO)	1					
	5PS–23126–40	.TUBO EXTERIOR (IZQUIERDO)		1				
3	5PS–23110–10	.TUBO INTERIOR COMPLETO 1	1	1				
4	3GM–23171–00	..PISTON HORQUILLA DELANT.	1	1				
5	5PS–23170–10	.CILINDRO COMPL DE HORQ DELANT	1	1				
6	3GM–23125–00	.METAL CORREDIZO 1	1	1				
7	4V4–23146–L0	.ARANDELA DE SELLO DE ACEITE	1	1				
8	4PU–23145–01	.RETEN DE ACEITE	1	1				
9	4V4–23153–L0	.ANILLO DE ENGANCHE	1	1				
10	4PU–23144–00	.GUARDAPOLVO	1	1				
11	5PS–23173–00	.VASTAGO AHUSADO	1	1				
12	509–23158–L0	.EMPAQUE	1	1				
13	278–23181–50	.TORNILLO CABEZAHEXAGONAL	1	1				
14	5PS–23141–10	.RESORTE HORQUILLA DELANT.	1	1				
15	3LR–23149–00	.ARANDELA DE RESORTE SUPERIOR	1	1				
16	4GY–23118–10	.SEPARADOR	1	1				
17	3FV–23149–00	.ARANDELA DE RESORTE SUPERIOR	1	1				
18	5PS–23111–00	.PERNO DE TAPA	1	1				
19	5PS–23103–30	HORQUILLA DELANTERA COMPL.(MD)	1					
	5PS–23103–40	HORQUILLA DELANTERA COMPL.(MD)		1				
20	5PS–23136–30	.TUBO EXTERIOR	1					
	5PS–23136–40	.TUBO EXTERIOR		1				
21	5PS–23110–10	.TUBO INTERIOR COMPLETO 1	1	1				
22	3GM–23171–00	..PISTON HORQUILLA DELANT.	1	1				
23	5PS–23170–10	.CILINDRO COMPL DE HORQ DELANT	1	1				

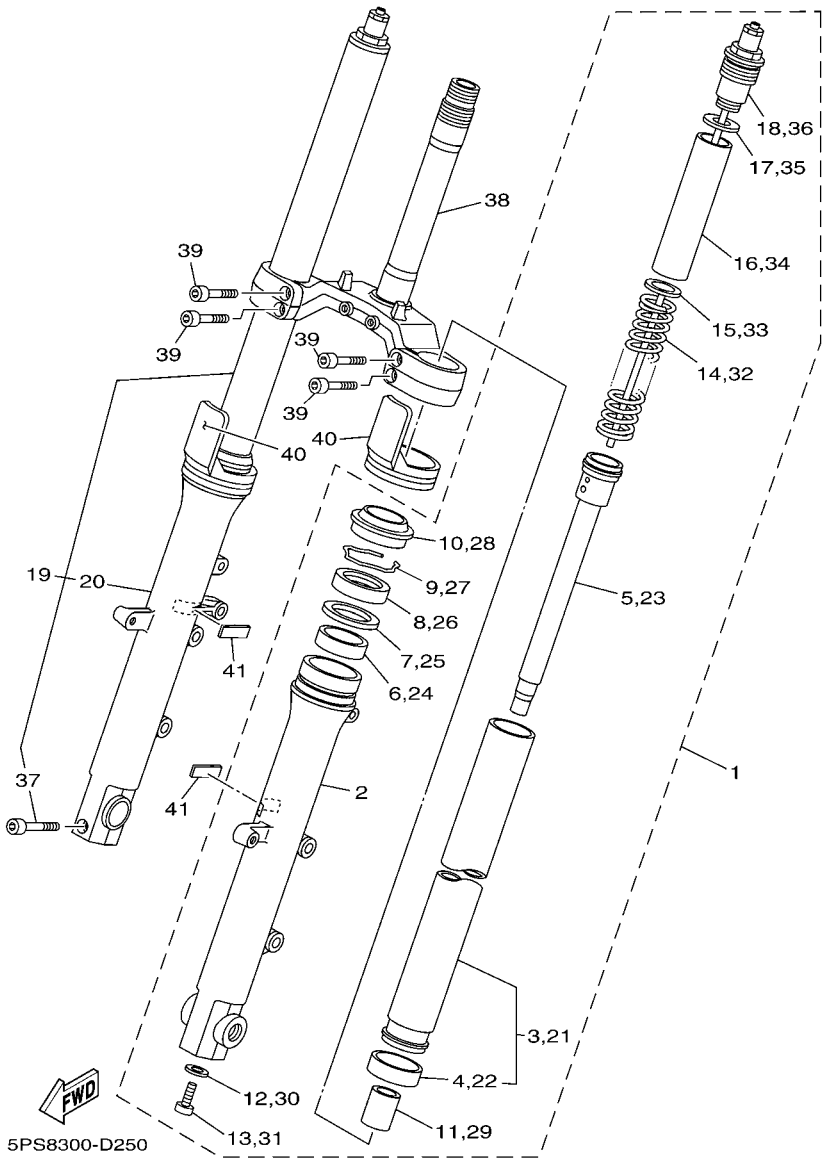

FIG. 25 HORQUILLA DELANTERA

REF. Nº	CODIGO Nº	DESCRIPCION	2B04	2B05				OBSERVACIONES
24	3GM–23125–00	.METAL CORREDIZO 1	1	1				
25	4V4–23146–L0	.ARANDELA DE SELLO DE ACEITE	1	1				
26	4PU–23145–01	.RETEN DE ACEITE	1	1				
27	4V4–23153–L0	.ANILLO DE ENGANCHE	1	1				
28	4PU–23144–00	.GUARDAPOLVO	1	1				
29	5PS–23173–00	.VASTAGO AHUSADO	1	1				
30	509–23158–L0	.EMPAQUE	1	1				
31	278–23181–50	.TORNILLO CABEZAHEXAGONAL	1	1				
32	5PS–23141–10	.RESORTE HORQUILLA DELANT.	1	1				
33	3LR–23149–00	.ARANDELA DE RESORTE SUPERIOR	1	1				
34	4GY–23118–10	.SEPARADOR	1	1				
35	3FV–23149–00	.ARANDELA DE RESORTE SUPERIOR	1	1				
36	5PS–23111–00	.PERNO DE TAPA	1	1				
37	91314–08040	.PERNO	1	1				
38	5PS–23340–10	PLATINA INFERIOR COMPLETA	1					
	5PS–23340–20	PLATINA INFERIOR COMPLETA		1				
39	91317–08025	PERNO	4	4				
40	4PU–2331G–00	CUBIERTA	2	2				
41	4NX–21541–00	AMORTIGUADOR 1	2	2				

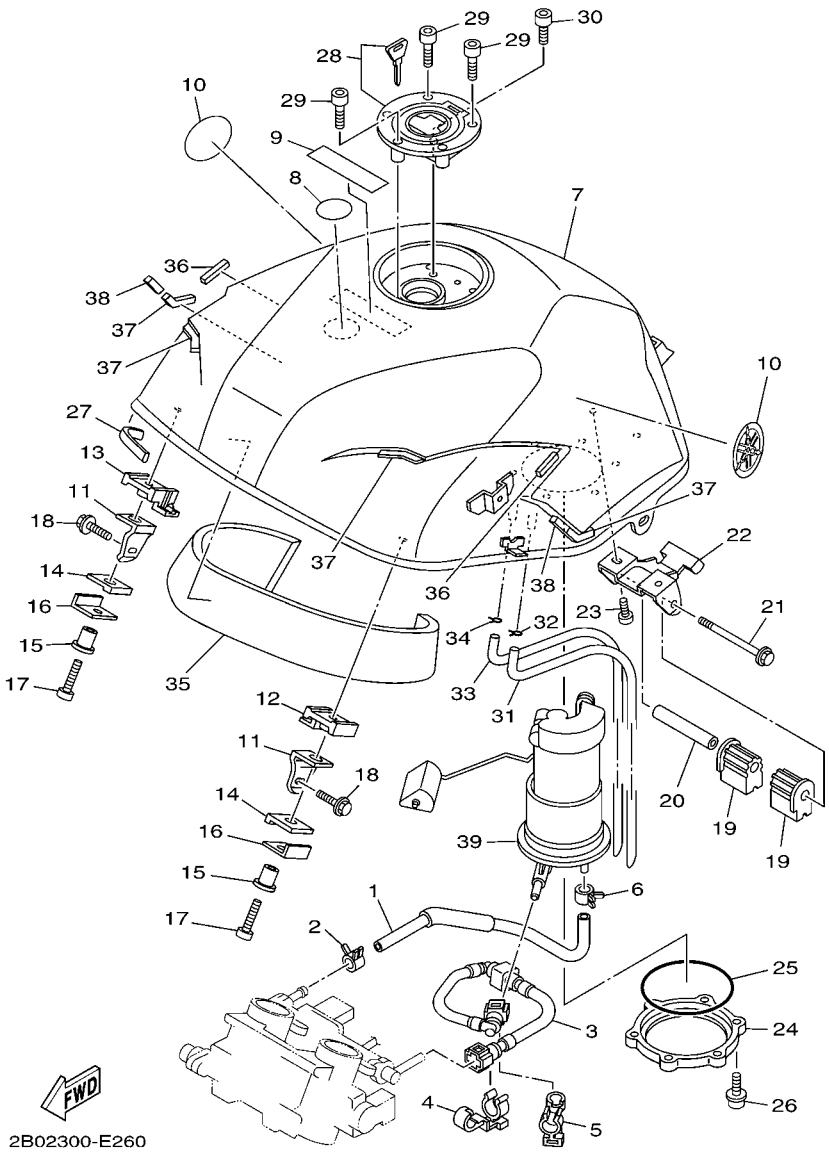

FIG. 26 DEPOSITO DE COMBUSTIBLE

REF. Nº	CODIGO Nº	DESCRIPCION	2B04	2B05				OBSERVACIONES
1	2B0–13972–00	TUBO, COMBUSTIBLE 2	1	1				
2	90467–12003	PRESILLA	1	1				
3	5PS–13971–00	ANILLO DE ESPACIADOR	1	1				
4	90464–16007	BRIDA	1	1				
5	90464–16005	BRIDA	1	1				
6	90467–12003	PRESILLA	1	1				
7	5PS–YK241–10–P9	DEPOSITO DE COMBUSTIBLE COMP.	1					UR PARA SMX
	5PS–YK241–10–P8	DEPOSITO DE COMBUSTIBLE COMP.	1					UR PARA DRMK
	5PS–YK241–10–P1	DEPOSITO DE COMBUSTIBLE COMP.		1				PARA S3
8	3ME–2415E–01	EMBLEMA DE PRECAUCTON	1	1				
9	5PA–21568–00	ETIQUETA DE PRECAUCION	1	1				
10	5PW–2413B–00	EMBLEMA	2	2				
11	5PS–24191–00	SOPORTE DEPOSITO DE COMBUST.1	2	2				
12	5PS–24181–00	AMORTIGUADOR DE MONTAJE 1	1	1				
13	5PS–24181–10	AMORTIGUADOR DE MONTAJE 1	1	1				
14	5PS–24183–00	AMORTIGUADOR DE MONTAJE 3	2	2				
15	90387–0602Y	ESPACIADOR	2	2				
16	5PS–24186–00	ARANDELA ESPECIAL	2	2				
17	92017–06025	PERNO	2	2				
18	95807–08016	TORNILLO	2	2				
19	5EB–24183–00	AMORTIGUADOR DE MONTAJE 3	2	2				
20	90387–061W6	ESPACIADOR	1	1				
21	95027–06090	PERNO, DE BRIDA	1	1				
22	2B0–24192–00	SOPORTE DE DEPOSITO COMBUST.2	1	1				
23	92017–06010	PERNO	2	2				
24	5JW–24491–00	SOPORTE BOMBA COMBUSTIBLE	1	1				
25	5JW–24486–00	ANILLO O	1	1				

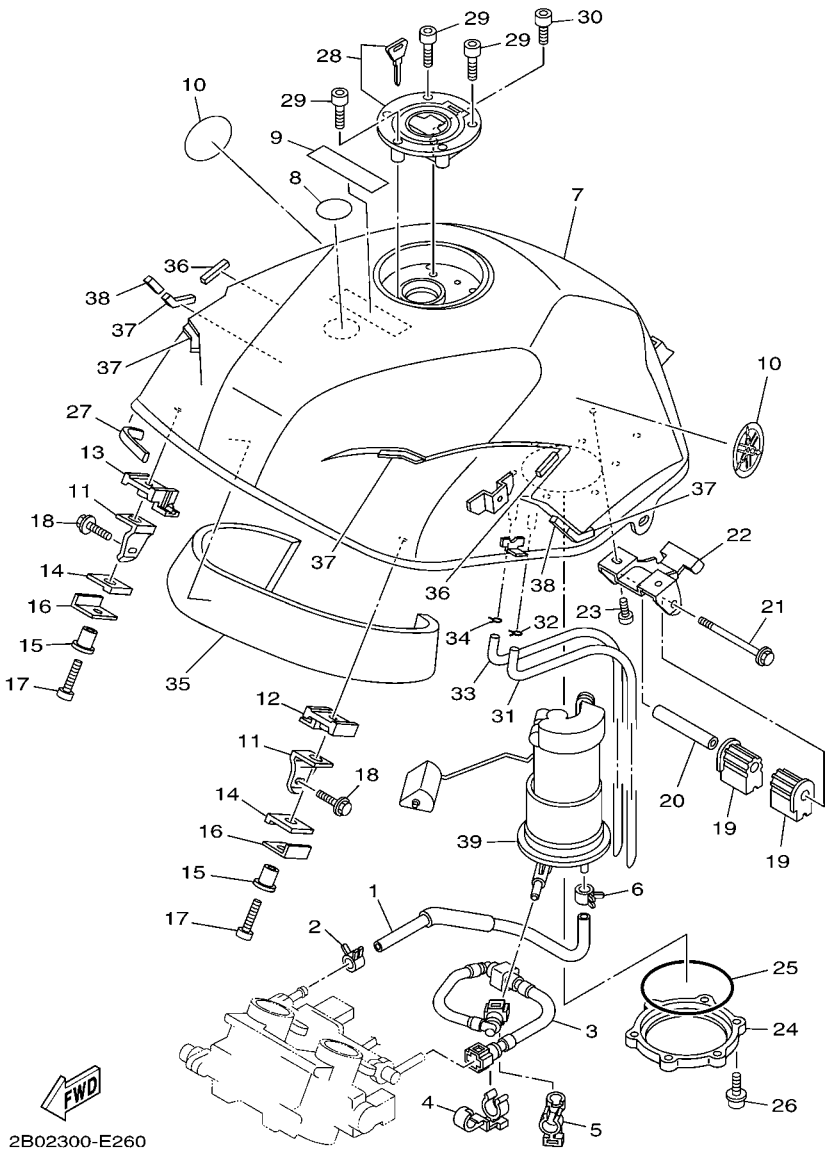

FIG. 26 DEPOSITO DE COMBUSTIBLE

REF. Nº	CODIGO Nº	DESCRIPCION	2B04	2B05				OBSERVACIONES
26	90110–05014	TORNILLO ALLEN	6	6				
27	4BP–24188–00	MOLDURA DEPOSITO COMBUST.	1	1				
28	5JJ–24602–00	TAPON COMPLETO	1	1				
29	90110–05112	TORNILLO ALLEN	3	3				
30	91317–05010	PERNO	1	1				
31	5PS–24318–00	TUBO DE REBOSAMIENTO	1	1				
32	90467–09006	PRESILLA	1	1				
33	5PS–24318–00	TUBO DE REBOSAMIENTO	1	1				
34	90467–09006	PRESILLA	1	1				
35	5PS–2414H–10	EQUILIBRIO, CUBIERTA	1	1				
36	5PS–28217–00	AMORTIGUADOR 1	2	2				
37	5PS–2139X–00	AMORTIGUADOR	4	4				
38	5PS–28372–00	AMORTIGUADOR	2	2				
39	5PS–13907–01	BOMBA DE COMBUSTIBLE COMPLETA	1	1				

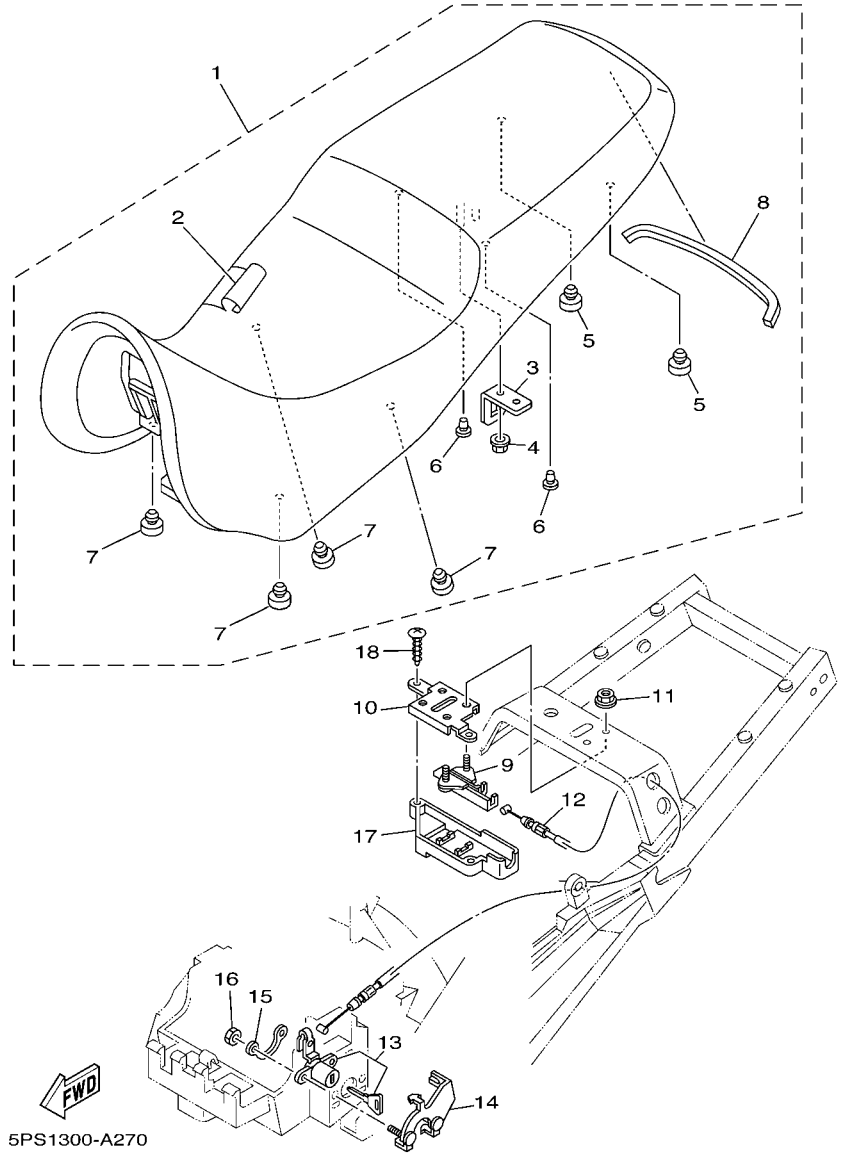

FIG. 27 ASIENTO

REF. Nº	CODIGO Nº	DESCRIPCION	2B04	2B05				OBSERVACIONES
1	5PS–24730–20	SILLIN DOBLE COMPLETO	1	1				
2	5PS–2470F–20	.FUNDADE SILLIN	1	1				
3	4HM–24728–00	.SOPORTE DE ASIENTO	1	1				
4	90179–06635	.TUERCA	1	1				
5	22W–24741–00	.COJIN DE ASIENTO	2	2				
6	90338–06018	.TAPON	2	2				
7	5PS–24741–00	.COJIN DE ASIENTO	4	4				
8	5LV–24737–00	.AMORTIGUADOR DE ASIENTO	1	1				
9	4BP–24780–00	CERRADURA SILLIN COMPLETO	1	1				
10	5PS–24792–00	PLACA	1	1				
11	95707–06500	TUERCA DE BRIDA	2	2				
12	5PS–2478E–00	CABLE	1	1				
13	2TV–W2470–00	JUEGO DE ROTOR	1	1				
14	5PS–2117K–00	SOPORTE DE CERRADURA	1	1				
15	5PS–24746–00	ARANDELA DE ASIENTO	1	1				
16	90170–06183	TUERCA	2	2				
17	5JJ–2475X–01	CUBIERTA 2	1	1				
18	97707–40012	TORNILLO ROSCA HEMBRA	2	2				

FIG. 28 RUEDA DELANTERA

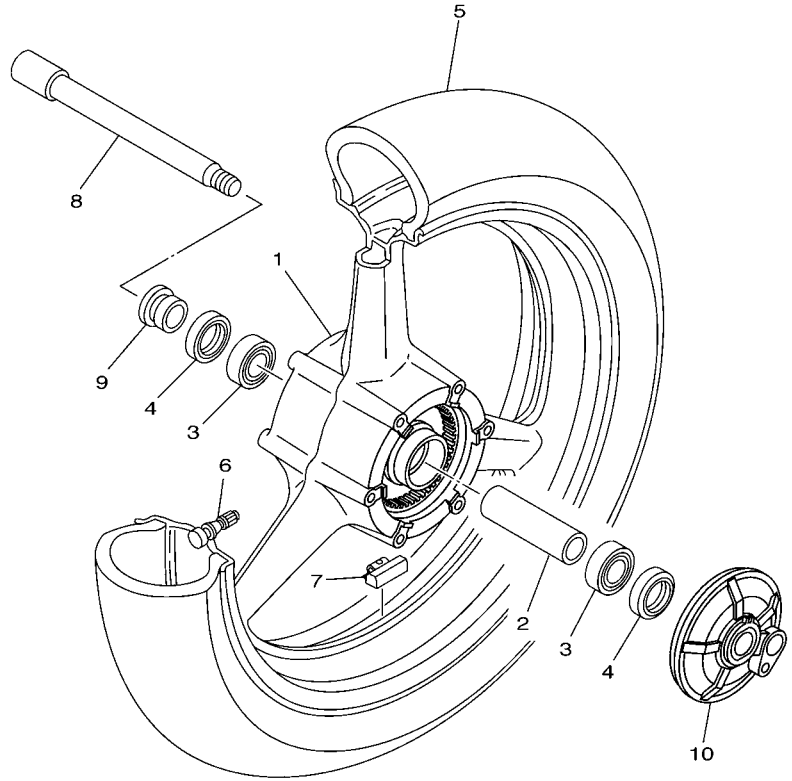

2B01300-D280

REF. Nº	CODIGO Nº	DESCRIPCION	2B04	2B05				OBSERVACIONES
1	2B0–W2516–00–98	RUEDA FUNDIDA DELANTERA	1					LGB PARA SMX,DRMK
	2B0–W2516–00–P0	RUEDA FUNDIDA DELANTERA		1				MBM3 PARA S3
2	5EA–25117–00	ESPACIADOR DE COJINETE	1	1				
3	93306–00420	COJINETE	2	2				
4	93106–28043	SELLO ACEITE	2	2				
5	94112–18019	NEUMATICO(120/70ZR18M/C(59W))	1	1				DUNLOP
6	93900–00030	VALVULA DE ARO (TR412)	1	1				TAIHEIYO
7	5MT–25398–00	BALANCEADOR DE RUEDA (10G)	1	1				UN
	5MT–25398–10	BALANCEADOR DE RUEDA (20G)	1	1				UN
	5MT–25398–20	BALANCEADOR DE RUEDA (30G)	1	1				UN
8	4XV–25181–10	EJE DE LA RUEDA	1	1				
9	90387–2200T	ESPACIADOR	1	1				
10	2B0–2517A–00	CAJA DE SENSOR	1	1				

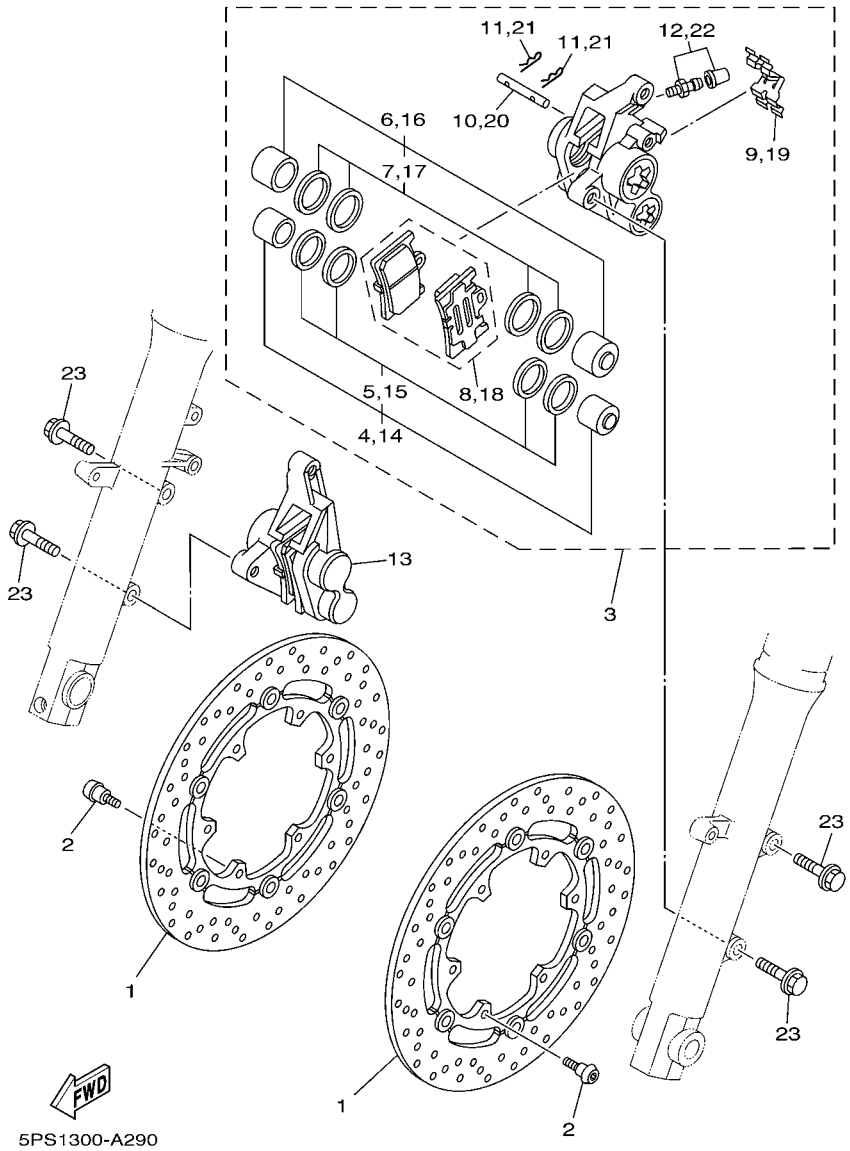

FIG. 29 CALIBRE FRENO DELANTERA

REF. Nº	CODIGO Nº	DESCRIPCION	2B04	2B05				OBSERVACIONES
1	5PX–2581T–00	DISCO DE FRENO	2	2				
2	90109–064G6	PERNO	12	12				
3	2D1–2580T–00	CALIBRE COMPLETO (IZQUIERDO)	1					
	5SL–2580T–00	CALIBRE COMPLETO (IZQUIERDO)		1				
4	4SV–W0057–00	.PISTON COMPLETO PINZA	1	1				
5	3MA–W0047–10	..JUEGO DE RETENES DE PINZA	1	1				
6	4SV–W0057–10	.PISTON COMPLETO PINZA	1	1				
7	3GM–W0047–10	..JUEGO DE RETENES DE PINZA	1	1				
8	5SL–W0045–00	.JUEGO DE COJIN DE FRENO	1	1				
9	4SV–25919–00	.SOPORTE DE PASTILLAS	1	1				
10	4SV–25924–00	.PASADOR	1	1				
11	3GM–25925–00	.PRESILLA	2	2				
12	1J3–W0048–00	.CJTO TORNILLO DE PURGA	1	1				
13	5D0–2580U–00	CALIBRE COMPLETO (DERECHO)	1					
	2B0–2580U–00	CALIBRE COMPLETO (DERECHO)		1				
14	4SV–W0057–00	.PISTON COMPLETO PINZA	1	1				
15	3MA–W0047–10	..JUEGO DE RETENES DE PINZA	1	1				
16	4SV–W0057–10	.PISTON COMPLETO PINZA	1	1				
17	3GM–W0047–10	..JUEGO DE RETENES DE PINZA	1	1				
18	5SL–W0045–00	.JUEGO DE COJIN DE FRENO	1	1				
19	4SV–25919–00	.SOPORTE DE PASTILLAS	1	1				
20	4SV–25924–00	.PASADOR	1	1				
21	3GM–25925–00	.PRESILLA	2	2				
22	5VS–W0048–00	.CJTO TORNILLO DE PURGA	1	1				
23	90105–105A7	TORNILLO	4	4				

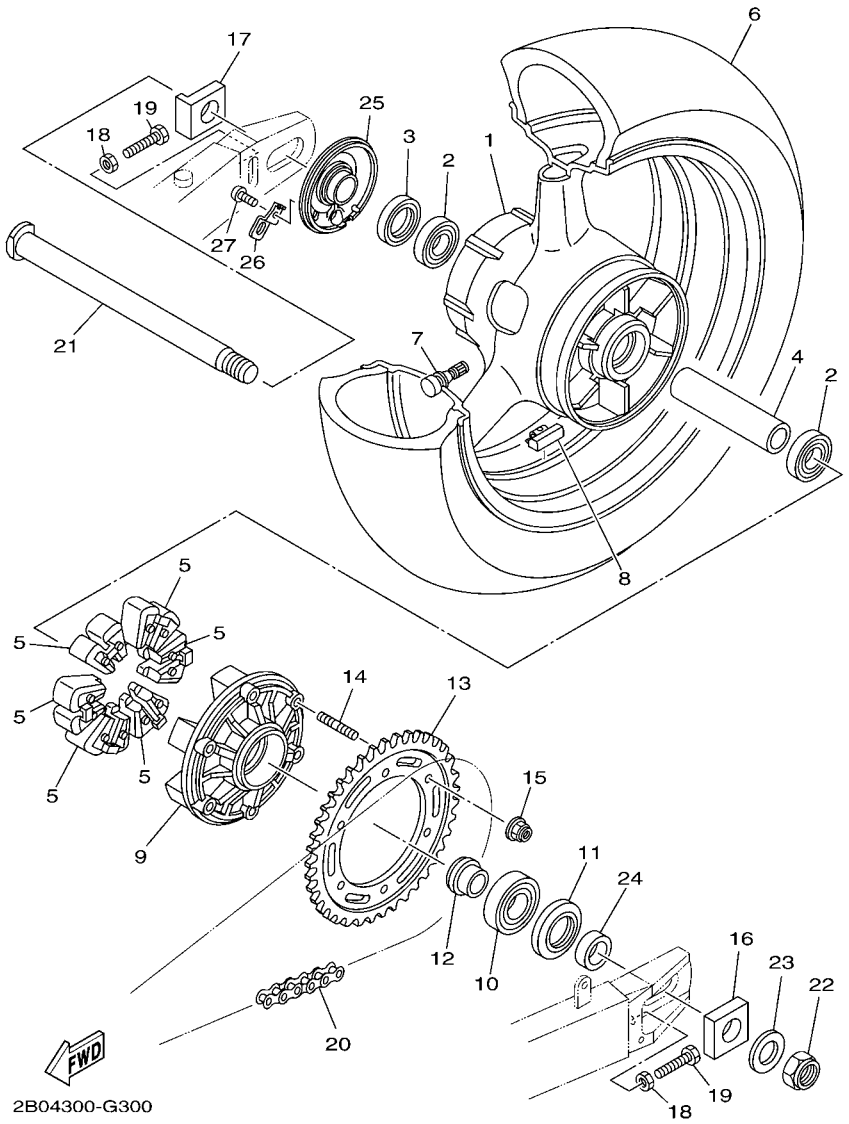

FIG. 30 RUEDA TRASERA

REF. Nº	CODIGO Nº	DESCRIPCION	2B04	2B05				OBSERVACIONES
1	2B0–W2533–00–98	RUEDA FUNDIDA TRASERA	1					LGB PARA SMX,DRMK
	2B0–W2533–00–P0	RUEDA FUNDIDA TRASERA		1				MBM3 PARA S3
2	93306–07806	COJINETE	2	2				
3	93106–35042	SELLO ACEITE	1	1				
4	5LV–25317–00	ESPACIADOR DE COJINETE	1	1				
5	5EA–25364–00	AMORTIGUADOR	6	6				
6	94116–17008	NEUMATICO (160/60ZR17M/C(69W))	1	1				DUNLOP
7	93900–00030	VALVULA DE ARO (TR412)	1	1				TAIHEIYO
8	5MT–25398–00	BALANCEADOR DE RUEDA (10G)	1	1				UN
	5MT–25398–10	BALANCEADOR DE RUEDA (20G)	1	1				UN
	5MT–25398–20	BALANCEADOR DE RUEDA (30G)	1	1				UN
9	5PS–25366–00	EMBRAGUE DE MASA	1	1				
10	93306–20644	COJINETE	1	1				
11	93106–40041	SELLO ACEITE	1	1				
12	4FM–25377–00	COLLAR DE RUEDA	1	1				
13	5PS–25442–00	CORONA (42T)	1	1				
14	90116–10575	ESPARRAGO	6	6				
15	95607–10200	TUERCA DE AUTO-CIERRE	6	6				
16	5EB–25388–00	TIRADOR DE CADENA 1	1	1				
17	5PS–25389–00	TIRADOR DE CADENA 2	1	1				
18	95307–08600	TUERCA	2	2				
19	90101–08766	TORNILLO	2	2				
20	94581–46118	KADENA (D.I.D.525HV KAI 118LE)	1	1				
21	4FM–25381–20	EJE DE RUEDA	1	1				
22	90185–24007	TUERCA AUTOBLOCANTE	1	1				
23	90201–25020	ARANDELA PLANA	1	1				
24	5PS–25376–00	COLLAR DE RUEDA	1	1				

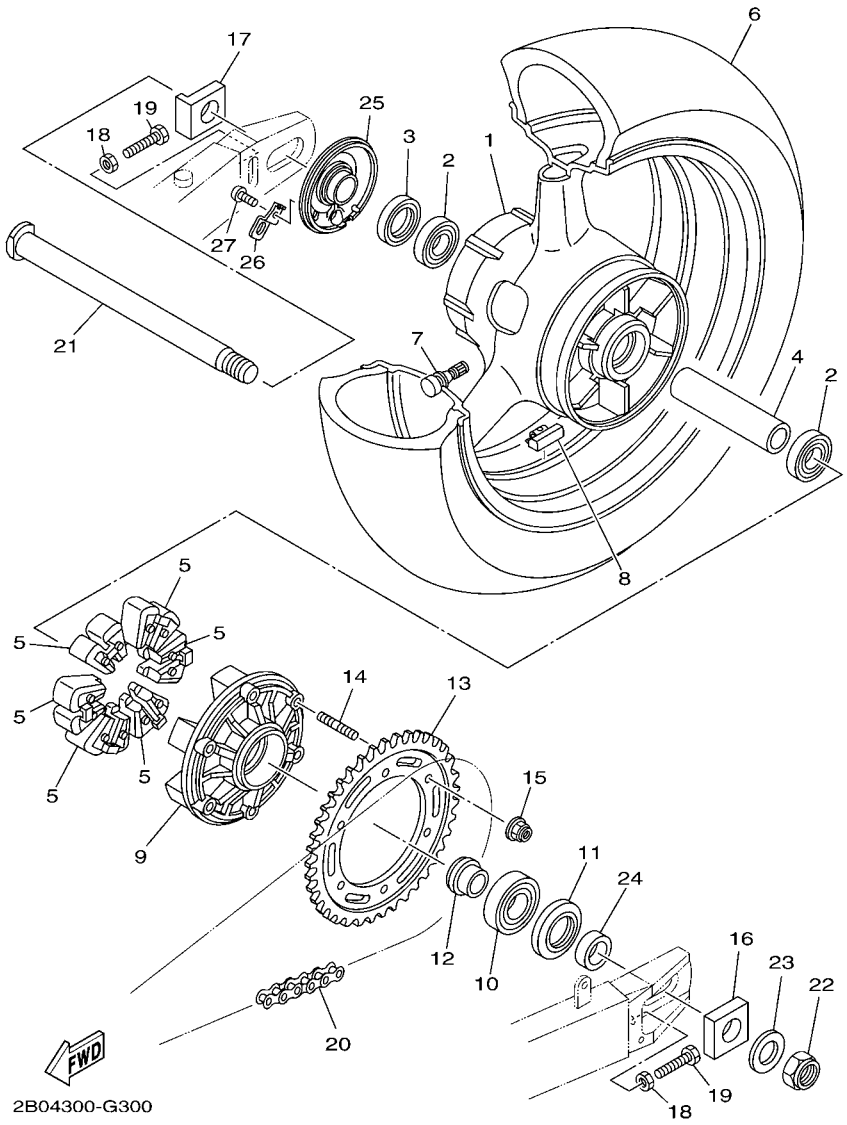

FIG. 30 RUEDA TRASERA

REF. Nº	CODIGO Nº	DESCRIPCION	2B04	2B05				OBSERVACIONES
25	2B0–2537A–00	CAJA DE SENSOR	1	1				
26	2B0–83599–00	GUIA DE CABLE	1	1				
27	92017–06010	PERNO	1	1				

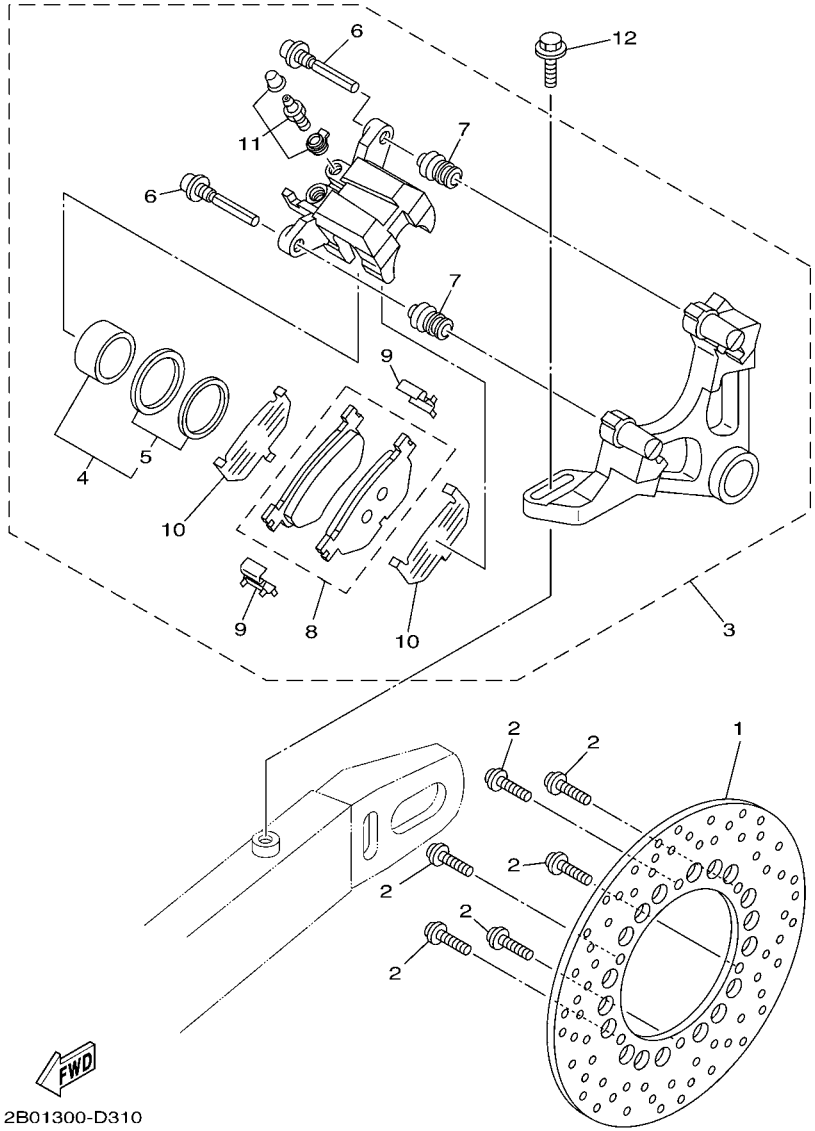

FIG. 31 CALIBRE FRENO TRASERA

REF. Nº	CODIGO Nº	DESCRIPCION	2B04	2B05				OBSERVACIONES
1	4JH–2582W–00	DISCO DE FRENO TRASEROS 2	1	1				
2	90109–083G4	PERNO	6	6				
3	2B0–2580W–00	CALIBRE COMPLETO TRASEROS 2	1	1				
4	5JW–W0057–00	.PISTON COMPLETO PINZA	1	1				
5	5JW–W0047–00	..JUEGO DE RETENES DE PINZA	1	1				
6	5JW–25914–10	.PASADOR	2	2				
7	4TT–25937–00	.FUNDA	2	2				
8	5PS–W0046–00	.JUEGO DE PASTILLAS DE FRENO 2	1	1				
9	5JW–25919–00	.SOPORTE DE PASTILLAS	2	2				
10	5GJ–25827–00	.CUNA DE CALIBRE	2	2				
11	5GM–W0048–01	.CJTO TORNILLO DE PURGA	1	1				
12	90105–08113	TORNILLO	1	1				

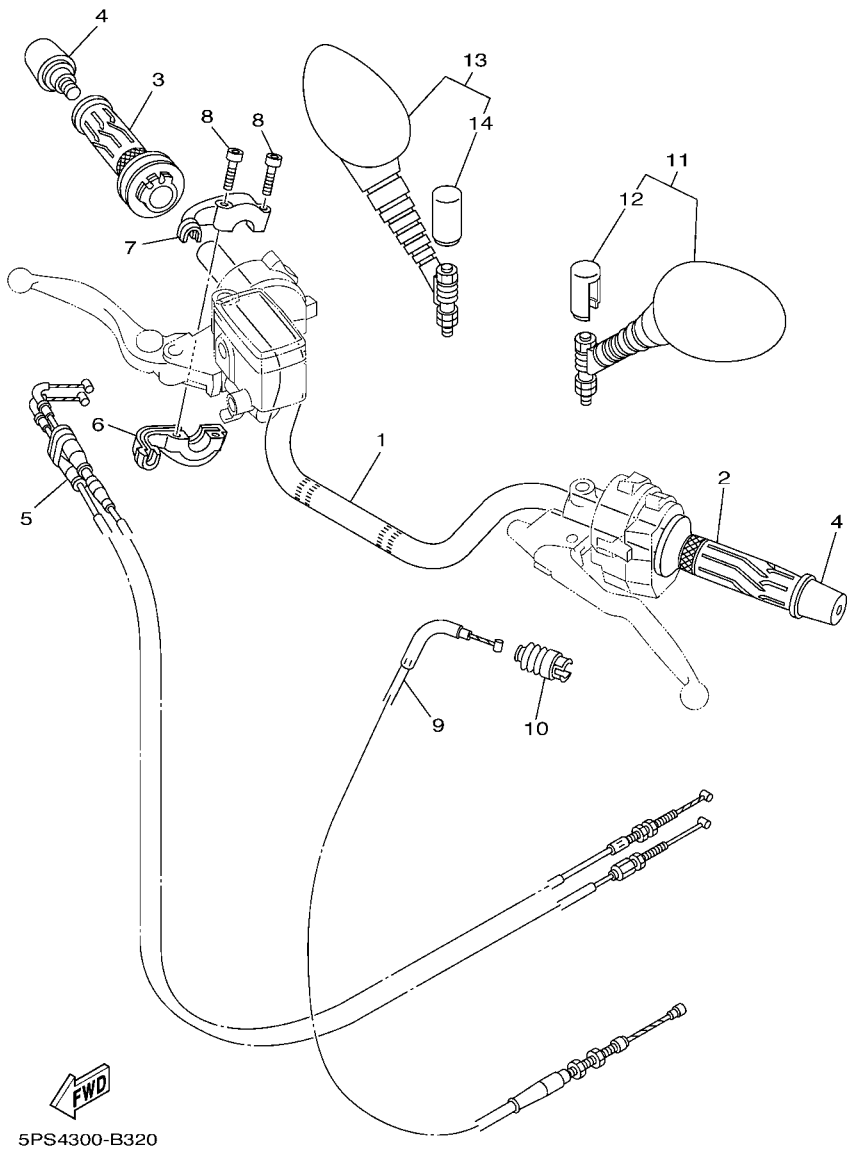

FIG. 32 MANILLAR & CABLE

REF. Nº	CODIGO Nº	DESCRIPCION	2B04	2B05				OBSERVACIONES
1	5PS–26111–10	MANUBRIO	1	1				
2	5JW–26241–00	EMPUNADURA	1	1				
3	5PS–26240–00	EMPUNADURA COMPLETA	1	1				
4	51J–26246–01	EXTREMO DE EMPUNADURA	2	2				
5	5PS–26302–00	CABLE DE ACELERADOR COMPLETO	1	1				
6	4KG–26281–00	TAPA DE EMPUNADURA SUPERIOR	1	1				
7	3XW–26282–01	TAPA, EMPUNADURA PLATINA	1	1				
8	91317–05035	PERNO	2	2				
9	5PS–26335–01	CABLE DE EMBRAGUE	1	1				
10	1E6–26342–00	FUNDA DE CABLE	1	1				
11	4TX–26280–50	ESPEJO COMPLETO (IZQUIERDO)	1	1				
12	5PS–26133–20	.TAPA	1	1				
13	4TX–26290–50	ESPEJO COMPLETO (DERECHO)	1	1				
14	5PS–26133–20	.TAPA	1	1				

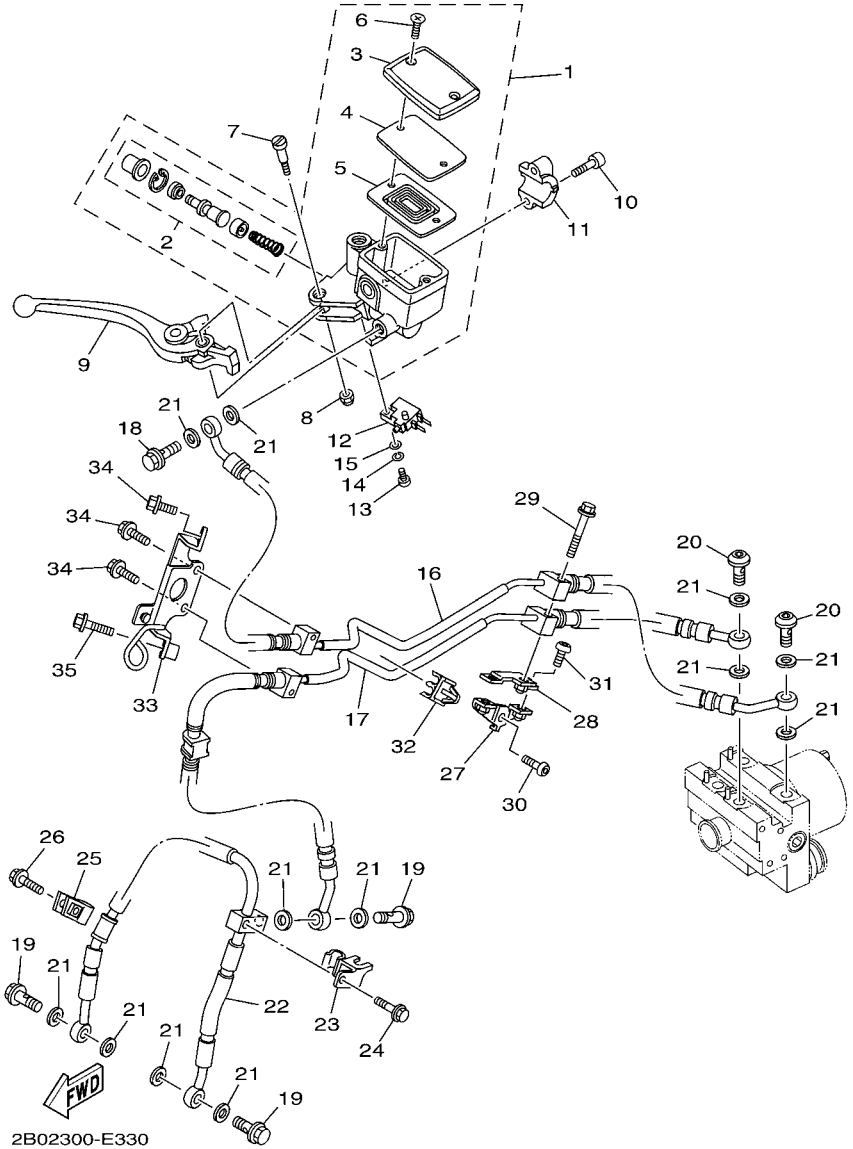

FIG. 33 CILINDRO MAESTRO DELANTERO

REF. Nº	CODIGO Nº	DESCRIPCION	2B04	2B05				OBSERVACIONES
1	2B0–W2587–00	CILINDRO MAESTRO SUB COMPLET	1	1				
2	5VS–W0041–00	.JUEGO DE CILINDRO MAESTRO	1	1				
3	5VS–25852–00	.TAPA DE TANQUE DE RESERVA	1	1				
4	5VS–25855–00	.BUJE DE DIAFRAGMA	1	1				
5	5VS–25854–00	.EMPAQUE,DIAFRAGMA	1	1				
6	5VS–2589H–00	.TORNILLO	2	2				
7	5VS–2589F–00	PERNO DE PALANCA	1	1				
8	95617–06100	TUERCAAUTOBLOCANTE	1	1				
9	5VS–83922–00	PALANCA 2	1	1				
10	5VS–26332–00	PERNO	2	2				
11	5VS–25867–00	SOSTEN	1	1				
12	4HM–83980–00	INTERRUP. DE PARADA DELANTERO	1	1				
13	98502–04012	TORNILLO	1	1				
14	92902–04100	ARANDELA	1	1				
15	92902–04600	ARANDELA	1	1				
16	2B0–2584B–00	MANGUERA DE FRENO	1	1				
17	2B0–2584C–00	MANGUERA DE FRENO	1	1				
18	90401–10020	PERNO DE UNION	1	1				
19	90401–10020	PERNO DE UNION	3	3				
20	90401–10172	PERNO DE UNION	2	2				
21	90430–10005	JUNTA	12	12				
22	2B0–25872–00	MANGUERA DE FRENO 1	1	1				
23	2B0–25834–00	ARANDELA DE CIERRE	1	1				
24	90105–06791	TORNILLO	1	1				
25	2R8–25876–20	SOPORTE DE MANGUERA FRENO 2	1	1				
26	90105–06790	TORNILLO	1	1				
27	2B0–2588F–00	SOPORTE DE MANGUERA FRENO 5	1	1				

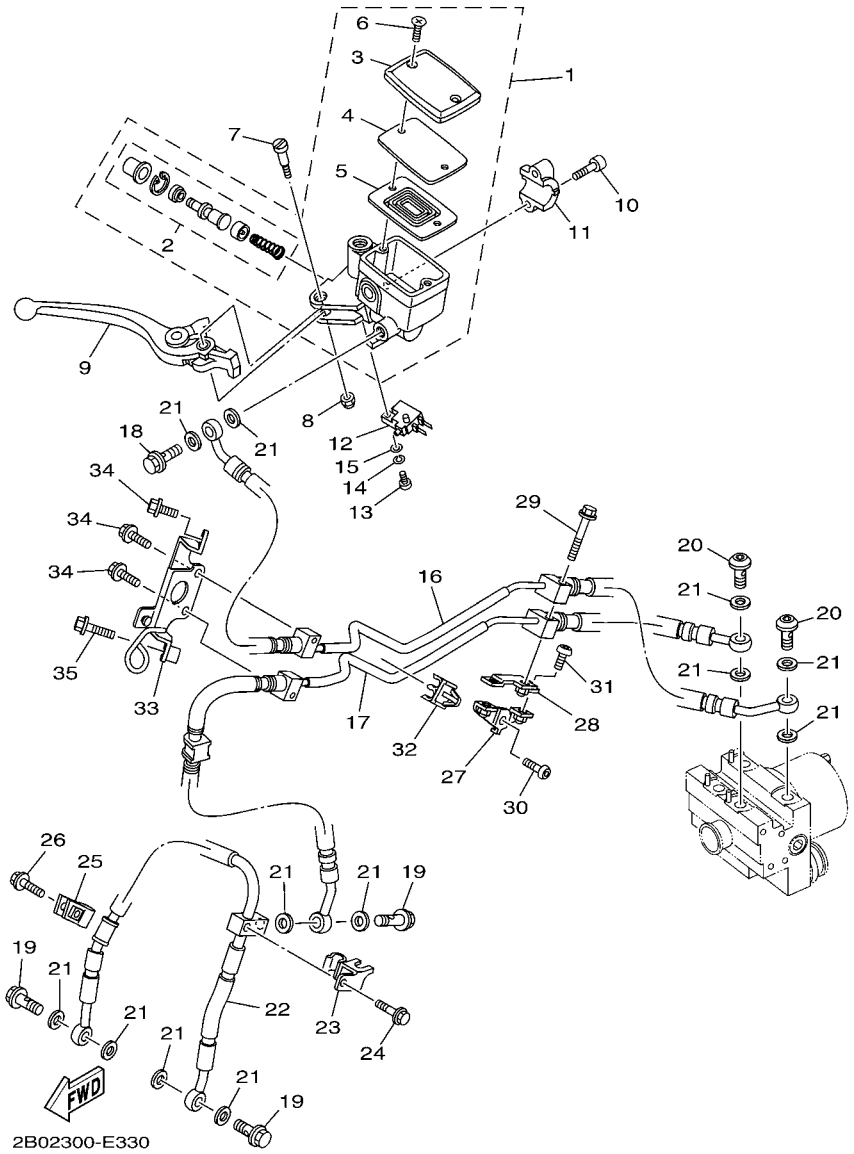

FIG. 33 CILINDRO MAESTRO DELANTERO

REF. Nº	CODIGO Nº	DESCRIPCION	2B04	2B05				OBSERVACIONES
28	2B0–2588G–00	SOPORTE DE MANGUERA FRENO 6	1	1				
29	95027–06040	PERNO, DE BRIDA	1	1				
30	92017–06016	PERNO	1	1				
31	92017–06010	PERNO	2	2				
32	90464–07009	BRIDA	1	1				
33	2B0–2587A–00	SOPORTE DE MANGUERA FRENO	1	1				
34	95027–06010	PERNO, DE BRIDA	3	3				
35	95027–06016	PERNO, DE BRIDA	1	1				

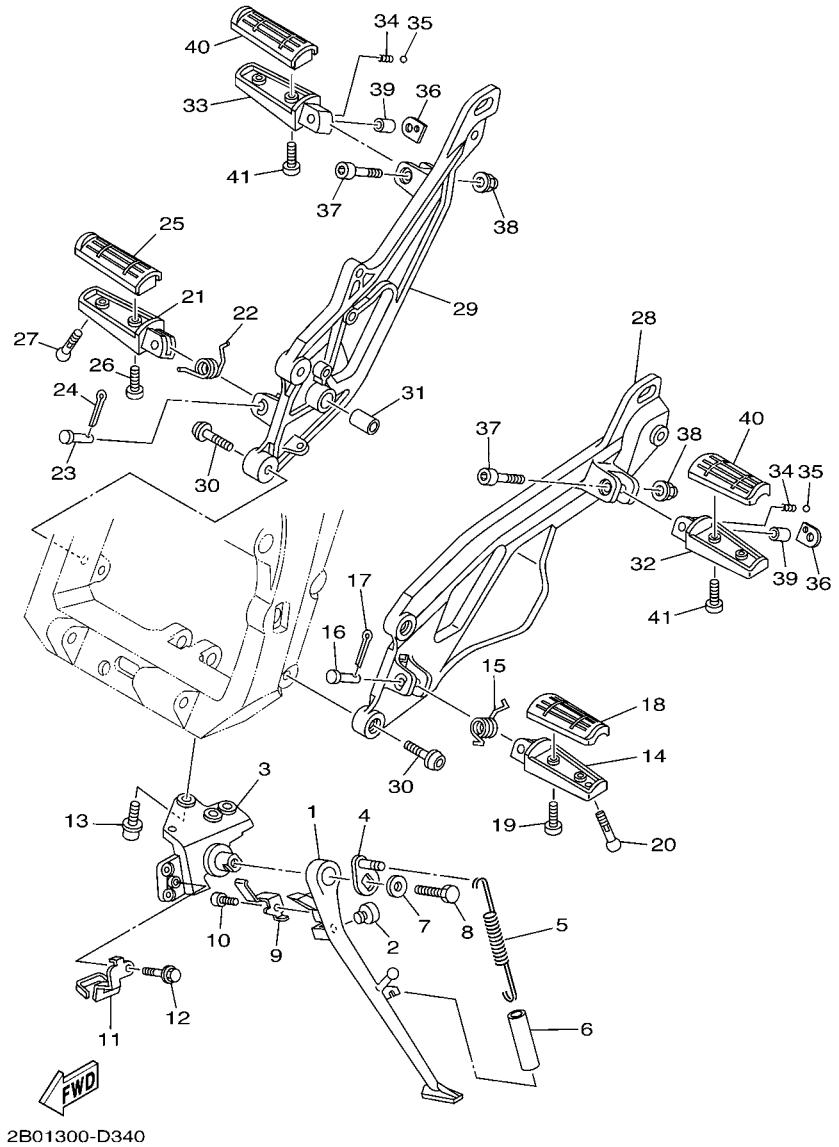

FIG. 34 SOPORTE & APOYAPIE

REF. Nº	CODIGO Nº	DESCRIPCION	2B04	2B05				OBSERVACIONES
1	5PS–27311–00	PUNTAL LATERAL	1	1				
2	128–27114–00	TOPE DE PUNTAL PRINCIPAL	1	1				
3	5PS–27321–00	SOPORTE DE PUNTAL LATERAL	1	1				
4	5PS–27352–00	GANCHO DE PUNTAL LATERAL	1	1				
5	90506–20008	RESORTE DE TENSION	1	1				
6	90445–197J2	TUBO (L60)	1	1				
7	90201–081R9	ARANDELA PLANA	1	1				
8	90101–08662	TORNILLO	1	1				
9	5JJ–27315–00	CONEXION DE PUNTAL LATERAL	1	1				
10	90110–06226	TORNILLO ALLEN	1	1				
11	5PS–27323–00	SOPORTE 1	1	1				
12	95027–06010	PERNO, DE BRIDA	1	1				
13	90109–082F5	PERNO	3	3				
14	4BH–27451–01	APOYAPIE	1	1				
15	90508–20572	RESORTE DE TORSION	1	1				
16	90240–08084	PASADOR CON HOYO	1	1				
17	91401–25015	CHAVETA	1	1				
18	3YX–27413–00	CUBIERTA DE APOYAPIE	1	1				
19	90157–05079	TORNILLO CABEZA CONICA PLANA	2	2				
20	90109–08174	PERNO	1	1				
21	4BH–27461–01	APOYAPIE	1	1				
22	90508–20572	RESORTE DE TORSION	1	1				
23	90240–08084	PASADOR CON HOYO	1	1				
24	91401–25015	CHAVETA	1	1				
25	3YX–27413–00	CUBIERTA DE APOYAPIE	1	1				
26	90157–05079	TORNILLO CABEZA CONICA PLANA	2	2				
27	90109–08174	PERNO	1	1				

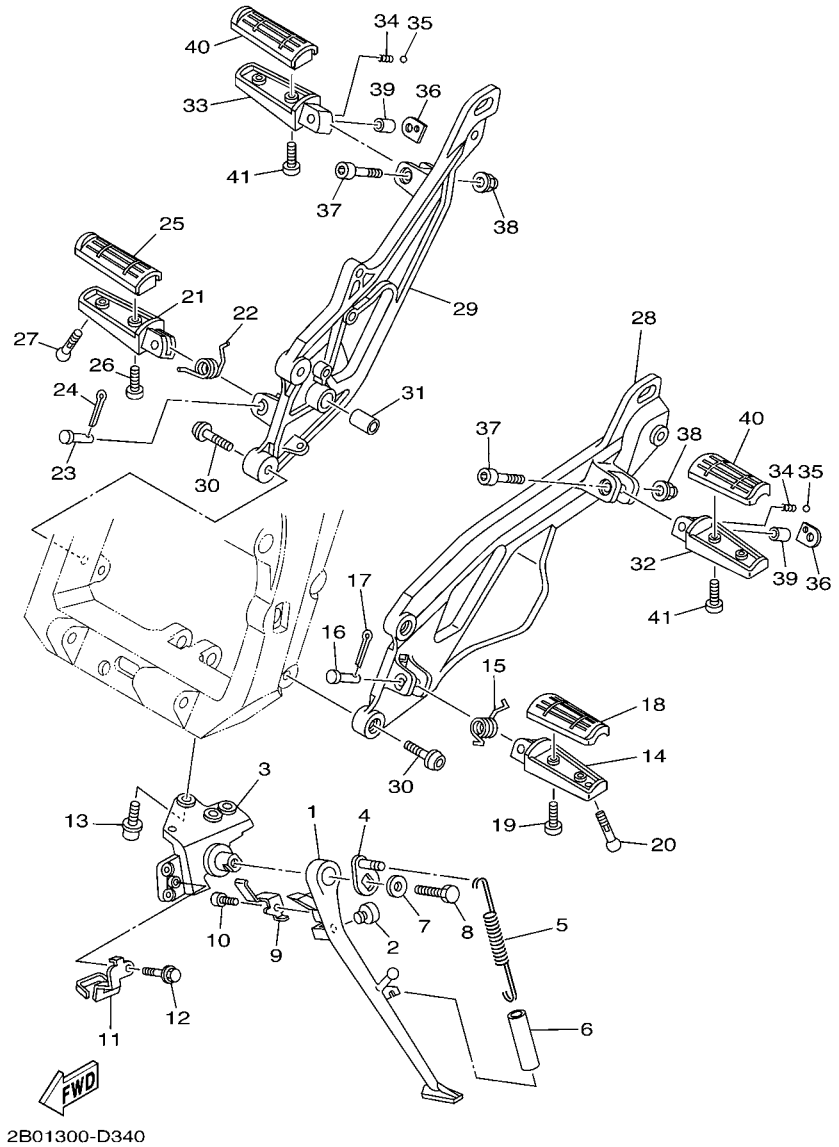

FIG. 34 SOPORTE & APOYAPIE

REF. Nº	CODIGO Nº	DESCRIPCION	2B04	2B05				OBSERVACIONES
28	5PS–27442–00	SOPORTE 2	1	1				
29	5PS–27443–00	SOPORTE 3	1	1				
30	90110–08220	TORNILLO ALLEN	4	4				
31	90383–14001	BUJE	1	1				
32	5LV–27431–01	APOYAPIE POSTERIOR 1	1	1				
33	5LV–27441–01	APOYAPIE POSTERIOR 2	1	1				
34	90501–15001	RESORTE DE COMPRESION	2	2				
35	93501–04011	BOLA	2	2				
36	5JJ–27437–01	ARANDELA ESPECIAL	2	2				
37	91314–06040	PERNO	2	2				
38	95604–06200	TUERCA DE AUTO-CIERRE	2	2				
39	90387–06014	ESPACIADOR	2	2				
40	3YX–27413–00	CUBIERTA DE APOYAPIE	2	2				
41	90157–05134	TORNILLO CABEZA CONICA PLANA	4	4				

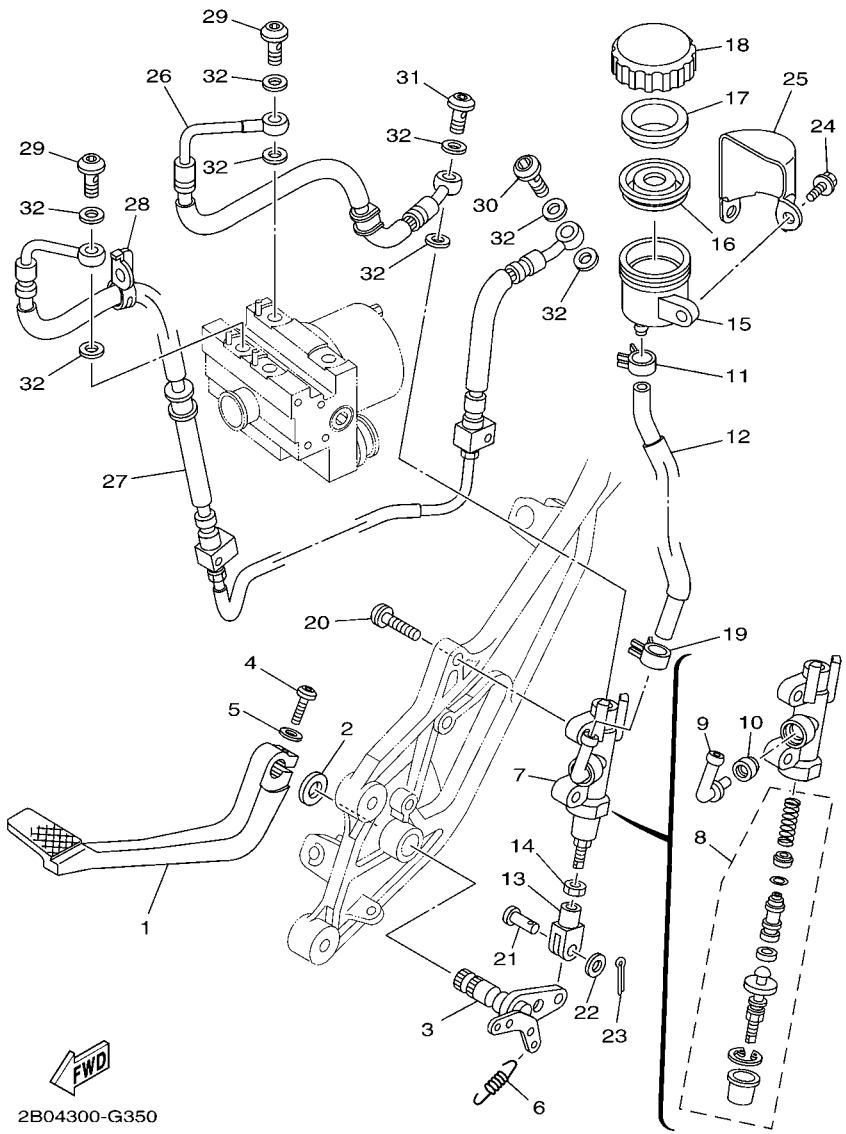

FIG. 35 CILINDRO MAESTRO TRASERO

REF. Nº	CODIGO Nº	DESCRIPCION	2B04	2B05				OBSERVACIONES
1	5PS–27211–00	PEDAL DE FRENO	1	1				
2	90201–14215	ARANDELA PLANA	1	1				
3	5PS–27212–00	EJE DE PEDAL DE FRENO	1	1				
4	92014–06025	PERNO	1	1				
5	92990–06600	ARANDELA PLANA	1	1				
6	90506–20223	RESORTE DE TENSION	1	1				
7	2B0–2583V–00	CILINDRO, MAESTRO TRASERO	1	1				
8	5PS–W0042–50	.JUEGO DE CILINDRO MAESTRO	1	1				
9	5VX–2582A–00	.CONECTOR	1	1				
10	4BP–2585F–00	.BUJE	1	1				
11	90467–090A1	PRESILLA	1	1				
12	2B0–25895–00	MANGUERA DE TANQUE DE RESERVA	1	1				
13	47X–27222–00	UNION	1	1				
14	95307–08700	TUERCA	1	1				
15	5VS–25894–00	TANQUE DE RESERVA	1	1				
16	5SL–25854–00	EMPAQUE,DIAFRAGMA	1	1				
17	5SL–25855–00	BUJE DE DIAFRAGMA	1	1				
18	5SL–25852–00	TAPA DE TANQUE DE RESERVA	1	1				
19	90467–090A0	PRESILLA	1	1				
20	92014–08030	PERNO	2	2				
21	90240–08013	PASADOR CON HOYO	1	1				
22	90201–08083	ARANDELA PLANA	1	1				
23	91401–20012	CHAVETA	1	1				
24	95027–06020	PERNO, DE BRIDA	1	1				
25	2B0–25888–00	CUBIERTA DE TANQUE DE RESERVA	1	1				
26	2B0–2581J–00	MANGUERA, DE FRENO 4	1	1				
27	2B0–2581K–00	MANGUERA, DE FRENO	1	1				

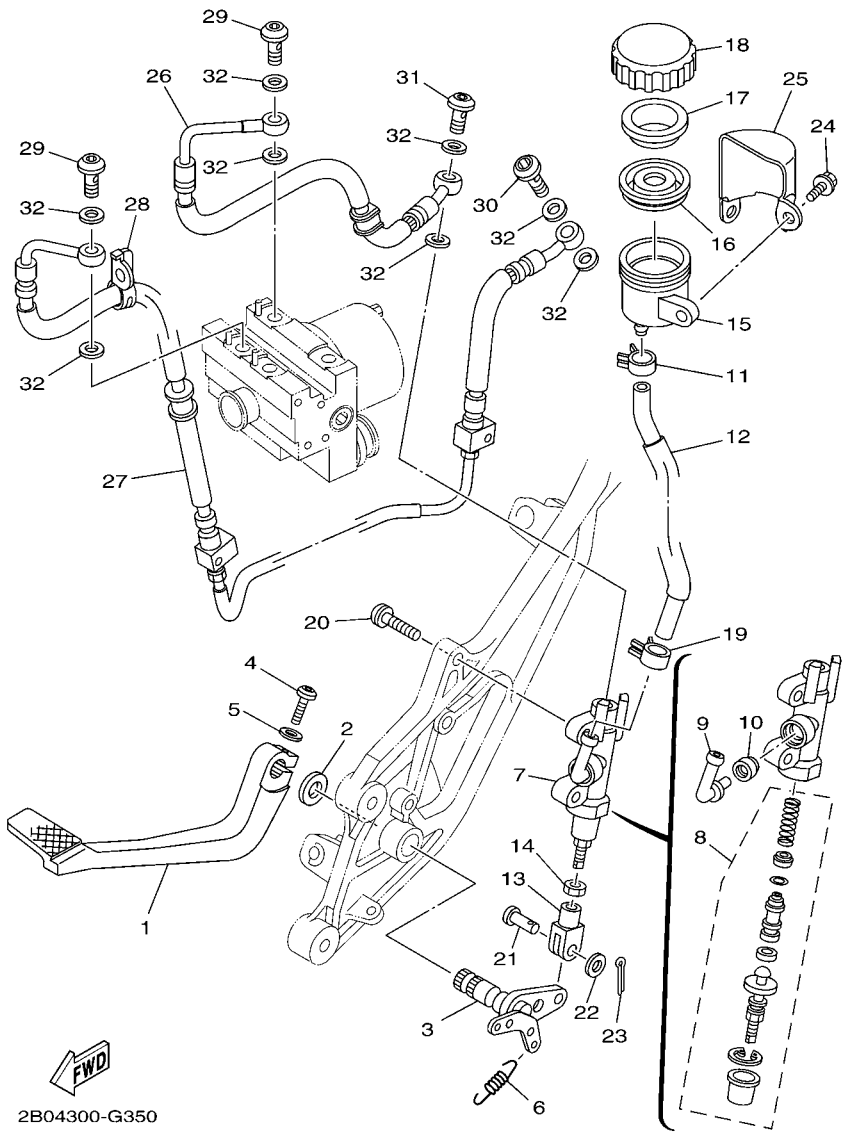

FIG. 35 CILINDRO MAESTRO TRASERO

REF. Nº	CODIGO Nº	DESCRIPCION	2B04	2B05				OBSERVACIONES
28	2B0–25875–00	SOPORTE DE MANGUERA FRENO 1	1	1				
29	90401–10172	PERNO DE UNION	2	2				
30	90401–10020	PERNO DE UNION	1	1				
31	90401–10020	PERNO DE UNION	1	1				
32	90430–10005	JUNTA	8	8				

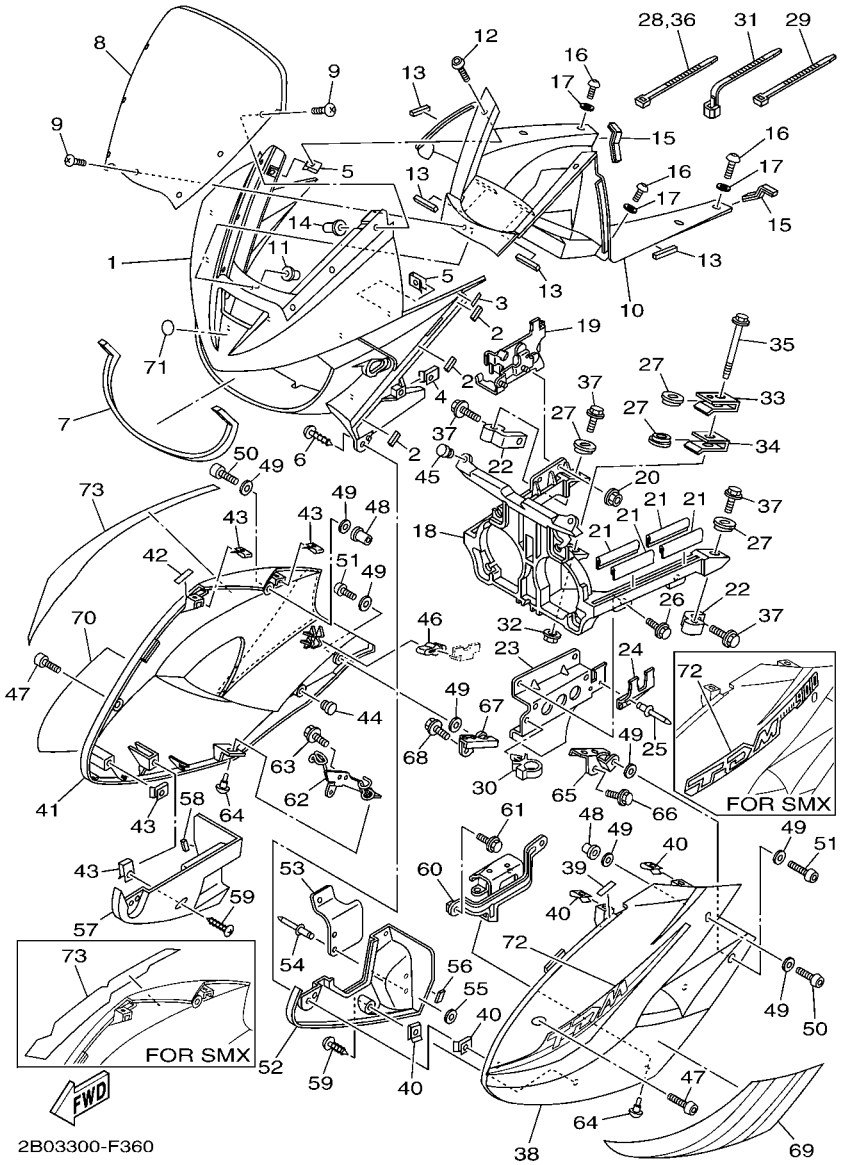

FIG. 36 BOVEDA 1

REF. Nº	CODIGO Nº	DESCRIPCION	2B04	2B05				OBSERVACIONES
1	5PS–2835G–00–P4	CARROCERIA, DELANT. SUP. 1	1					UR PARA SMX
	5PS–2835G–00–P6	CARROCERIA, DELANT. SUP. 1	1					UR PARA DRMK
	5PS–2835G–00–P1	CARROCERIA, DELANT. SUP. 1		1				PARA S3
2	4TX–21717–00	AMORTIGUADOR	6	6				
3	5PS–2178A–00	ETIQUETA DE ACEITE	2	2				
4	90183–05061	TUERCA DE RESORTE	2	2				
5	90183–05042	TUERCA DE RESORTE	4	4				
6	90167–05080	TORNILLO DE ROSCA HEMBRA	2	2				
7	5PS–84163–00	AMORTIGUADOR	1	1				
8	5PS–28381–01	PARABRISA	1	1				
9	90150–05024	TORNILLO CABEZA REDONDA	7	7				
10	5PS–2836K–00	PANEL 1	1	1				
11	90179–05523	TUERCA	1	1				
12	90167–05080	TORNILLO DE ROSCA HEMBRA	2	2				
13	5PS–28217–00	AMORTIGUADOR 1	4	4				
14	90179–05523	TUERCA	6	6				
15	5PS–28345–00	MOLDURA 1	2	2				
16	90167–05076	TORNILLO DE ROSCA HEMBRA	6	6				
17	90202–05224	ARANDELA DE PLANA	6	6				
18	5PS–28356–01	SOPORTE 1	1	1				
19	2B0–28322–10	SOPORTE 2	1	1				
20	95607–06200	TUERCA DE AUTO-CIERRE	2	2				
21	52W–2117G–00	PROTECTOR	4	4				
22	5PS–28332–00	SOPORTE PROTECTOR DE PATA	2	2				
23	2B0–28336–00	PLATO	1	1				
24	2B0–28337–00	SOPORTE	1	1				
25	90267–32018	REMACHE CIEGO	2	2				

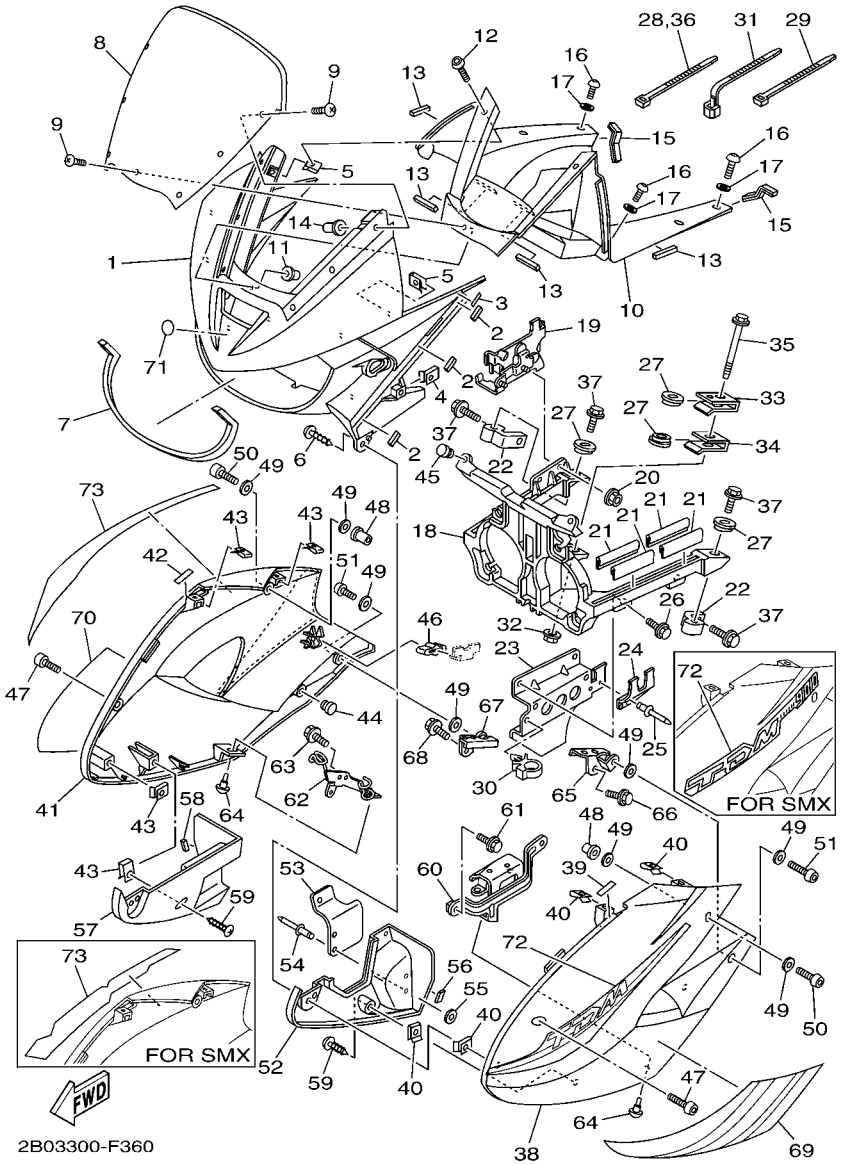

FIG. 36 BOVEDA 1

REF. Nº	CODIGO Nº	DESCRIPCION	2B04	2B05				OBSERVACIONES
26	90119–06044	TORNILLO CON ARANDELA	2	2				
27	5PS–28373–00	COLLAR	4	4				
28	90465–10098	BRIDA	1	1				
29	90464–35132	BRIDA	1	1				
30	90464–07209	BRIDA	1	1				
31	90464–15195	BRIDA	3	3				
32	95707–08500	TUERCA DE BRIDA	1	1				
33	5PS–28396–00	PLACA 1	1	1				
34	5PS–28397–00	PLACA 2	1	1				
35	5PS–28331–00	PERNO PROTECCION DE PATA	1	1				
36	90465–10098	BRIDA	1	1				
37	95817–08025	TORNILLO	4	4				
38	5PS–2835U–00–PA	PANEL 1	1					UR PARA SMX
	5PS–2835U–00–P9	PANEL 1	1					UR PARA DRMK
	5PS–2835U–00–P1	PANEL 1		1				PARA S3
39	5PS–2178A–00	ETIQUETA DE ACEITE	1	1				
40	90183–05042	TUERCA DE RESORTE	4	4				
41	5PS–2835V–00–PA	PANEL 2	1					UR PARA SMX
	5PS–2835V–00–P9	PANEL 2	1					UR PARA DRMK
	5PS–2835V–00–P1	PANEL 2		1				PARA S3
42	5PS–2178A–00	ETIQUETA DE ACEITE	1	1				
43	90183–05042	TUERCA DE RESORTE	4	4				
44	90338–10132	TAPON	2	2				
45	90338–11125	TAPON	2	2				
46	15A–21717–00	AMORTIGUADOR	2	2				
47	90110–05201	TORNILLO ALLEN	2	2				
48	90179–05523	TUERCA	2	2				

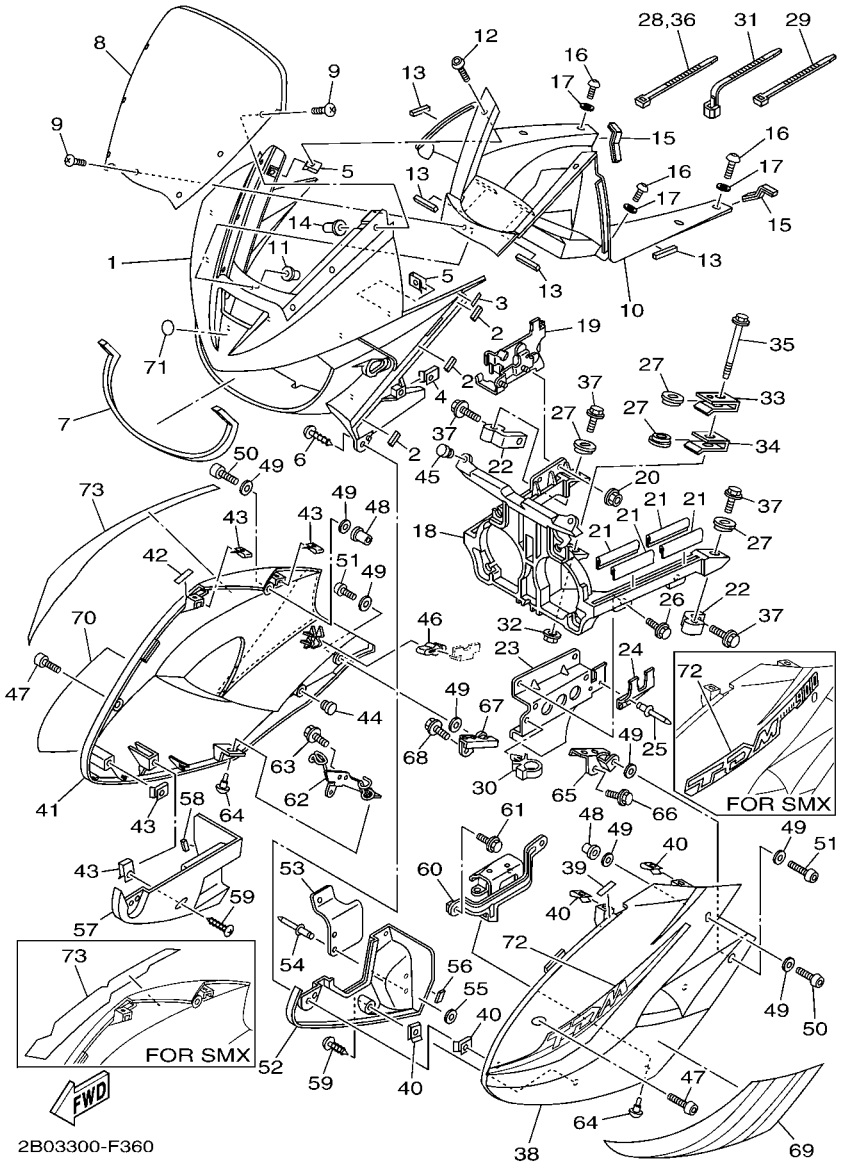

FIG. 36 BOVEDA 1

REF. Nº	CODIGO Nº	DESCRIPCION	2B04	2B05				OBSERVACIONES
49	90202–05224	ARANDELA DE PLANA	8	8				
50	90149–05299	TORNILLO DE REGLAJE	2	2				
51	90110–05201	TORNILLO ALLEN	2	2				
52	5PS–2837N–01	REJILLA, ADMISION DE AIRE 1	1	1				
53	2B0–2177F–00	CUBIERTA	1	1				
54	90267–32192	REMACHE CIEGO	3	3				
55	90201–03644	ARANDELA PLANA	3	3				
56	4TX–21717–00	AMORTIGUADOR	1	1				
57	5PS–2837R–00	REJILLA, ADMISION DE AIRE 2	1	1				
58	4TX–21717–00	AMORTIGUADOR	1	1				
59	97707–50016	TORNILLO	2	2				
60	2B0–28321–00	SOPORTE	1	1				
61	95807–06020	TORNILLO	1	1				
62	2B0–28357–00	SOPORTE 2	1	1				
63	95807–06020	TORNILLO	2	2				
64	90269–07077	REMACHE	2	2				
65	5PS–2836A–00	SOPORTE 1	1	1				
66	95807–06012	TORNILLO	1	1				
67	5PS–2836E–00	SOPORTE 2	1	1				
68	95807–06012	TORNILLO	1	1				
69	5PS–28393–60	CALCOMANIA 3	1					PARA DRMK
	5PS–28393–70	CALCOMANIA 3		1				
70	5PS–28394–60	CALCOMANIA 4	1					PARA DRMK
	5PS–28394–70	CALCOMANIA 4		1				
71	5LV–2836B–01	MARCA	1	1				
72	5PS–28391–A0	CALCOMANIA DE BOVEDA 1	1					UR PARA SMX
	5PS–28391–D0	CALCOMANIA DE BOVEDA 1	1					UR PARA DRMK

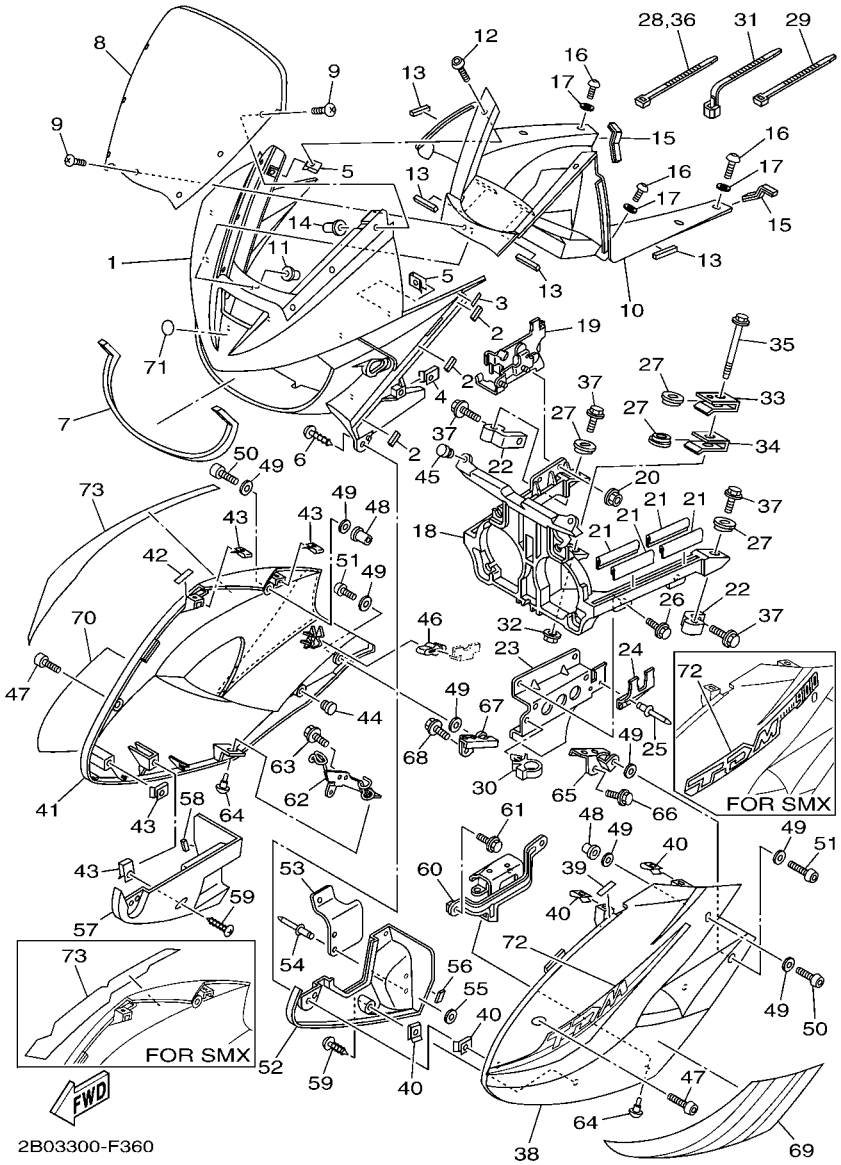

FIG. 36 BOVEDA 1

REF. Nº	CODIGO Nº	DESCRIPCION	2B04	2B05				OBSERVACIONES
72	5PS–28391–E0	CALCOMANIA DE BOVEDA 1		1				
73	5PS–28392–A0	CALCOMANIA DE BOVEDA 2	1					UR PARA SMX
	5PS–28392–D0	CALCOMANIA DE BOVEDA 2	1					UR PARA DRMK
	5PS–28392–E0	CALCOMANIA DE BOVEDA 2		1				

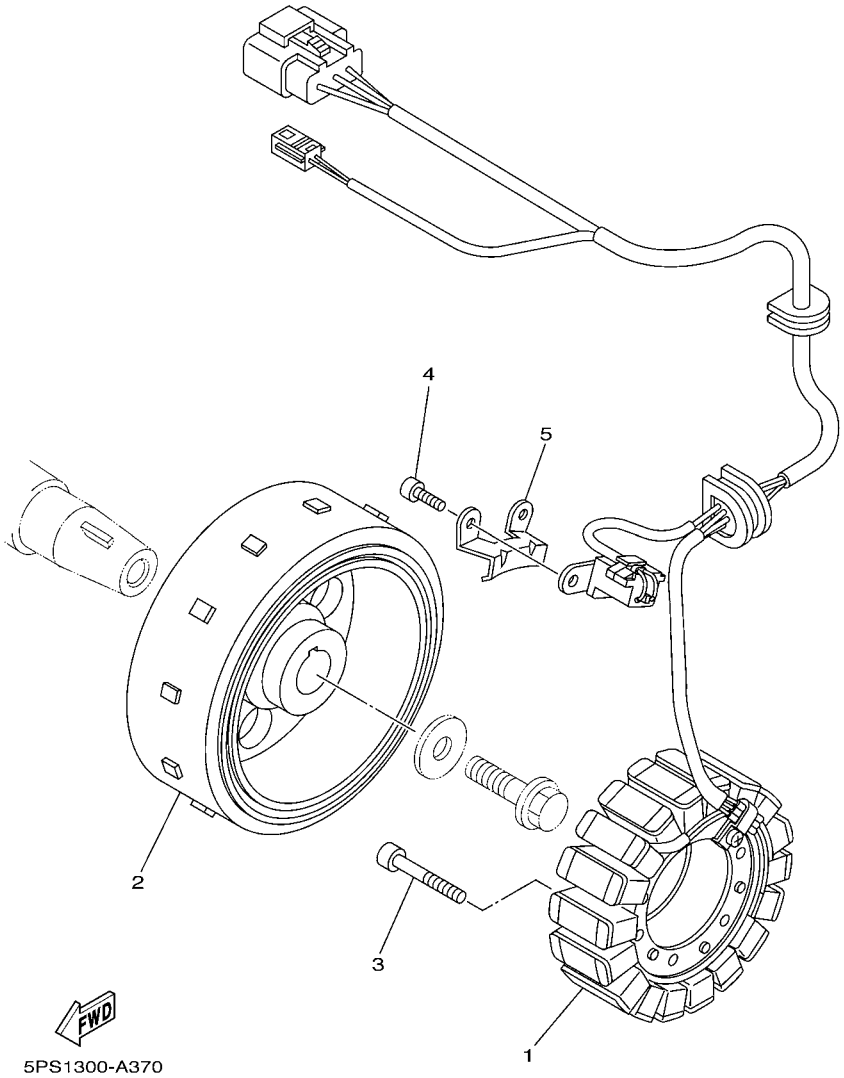

FIG. 37 GENERADOR

REF. Nº	CODIGO Nº	DESCRIPCION	2B04	2B05				OBSERVACIONES
1	5PS–81410–00	ESTATOR COMPLETO	1	1				
2	5PS–81450–00	ROTOR COMPLETO	1	1				
3	90110–06042	TORNILLO ALLEN	3	3				
4	90110–05011	TORNILLO ALLEN	2	2				
5	90465–08380	BRIDA	1	1				

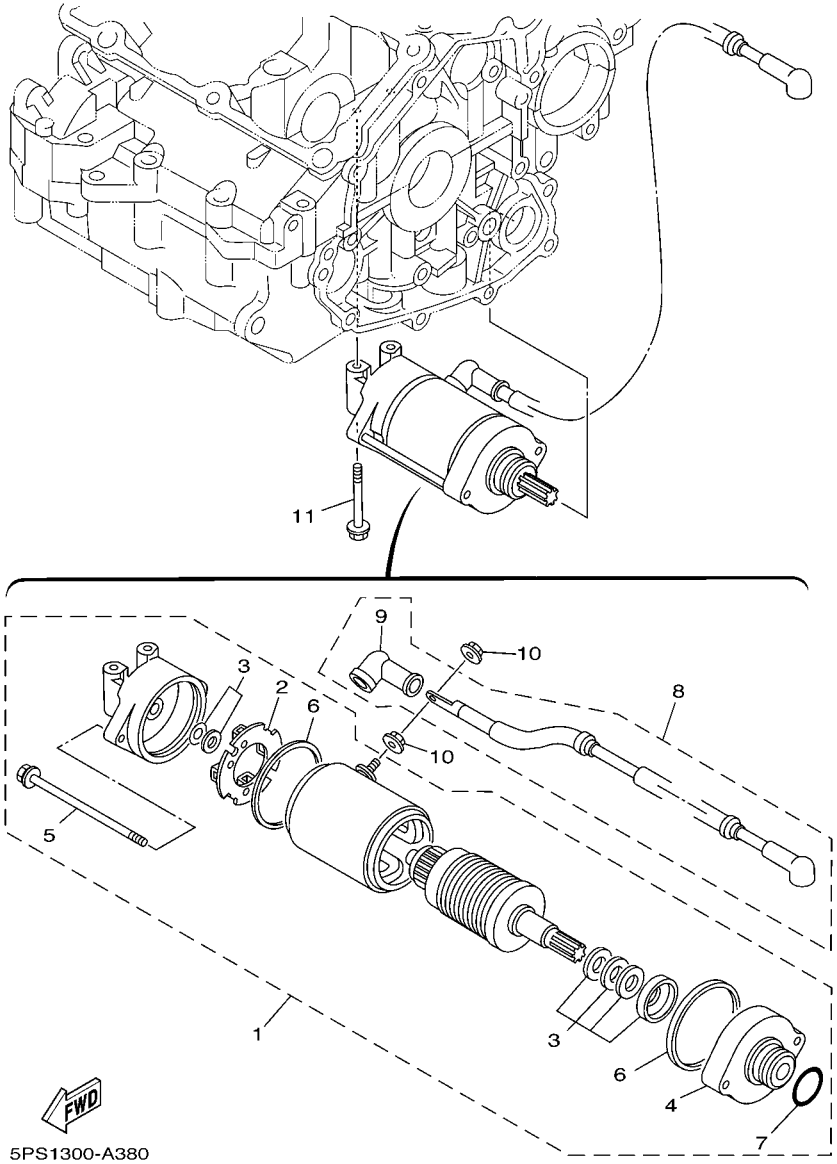

FIG. 38 MOTOR DE ARRANQUE

REF. Nº	CODIGO Nº	DESCRIPCION	2B04	2B05				OBSERVACIONES
1	3LD–81890–00	MOTOR DE ARRANQUE COMPLETO	1	1				
2	3AJ–81801–00	.JUEGO DE ESCOBILLA	1	1				
3	3AJ–81809–00	.JUEGO DE ARANDELA	1	1				
4	3AJ–81830–00	.SOPORTE DELANTERO COMPLETO	1	1				
5	3AJ–81826–00	.PERNO	2	2				
6	11H–81844–00	.EMPAQUE	2	2				
7	1FK–81847–00	.ANILLO GOMA	1	1				
8	1HX–81815–00	CABLE, MOTOR DE ARRANQUE	1	1				
9	4G0–81871–00	.TAPA	1	1				
10	4XV–8182A–00	TUERCA	2	2				
11	95817–06050	TORNILLO	2	2				

FIG. 39 LUZ DE DESTELLADOR

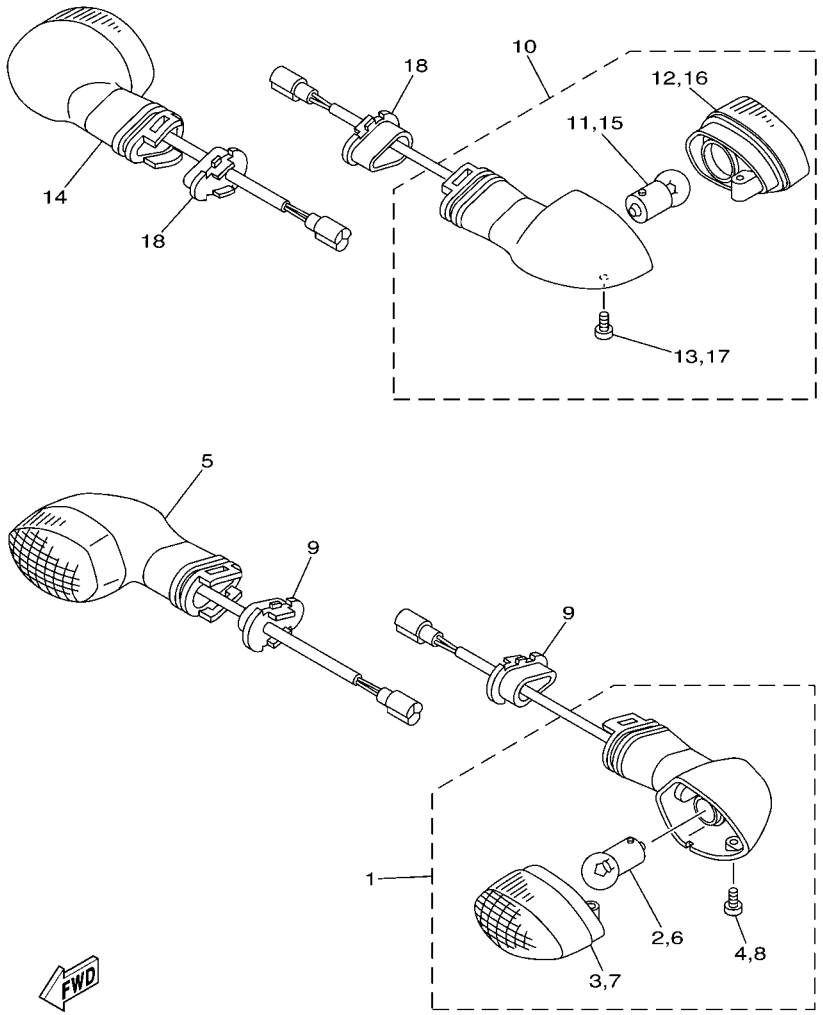

REF. Nº	CODIGO Nº	DESCRIPCION	2B04	2B05				OBSERVACIONES
1	5PW–83310–01	DESTELLADOR DE LUZ DELANT.	1	1				
2	1KH–83311–00	.BOMBILLA (12V-10W)	1	1				
3	5PW–8333A–00	.LENTES COMPLETO	1	1				
4	97706–04012	.TORNILLO, ROSCA CHAPA	1	1				
5	5PW–83320–01	DESTELLADOR DE LUZ DELANT.	1	1				
6	1KH–83311–00	.BOMBILLA (12V-10W)	1	1				
7	5PW–8334A–00	.LENTES COMPLETO	1	1				
8	97706–04012	.TORNILLO, ROSCA CHAPA	1	1				
9	5PW–83318–00	SOPORTE DE DESTELLADOR 1	2	2				
10	5PS–83330–01	DESTELLADOR DE LUZ TRAS.COMPL.	1	1				
11	1KH–83311–00	.BOMBILLA (12V-10W)	1	1				
12	5PW–8334A–00	.LENTES COMPLETO	1	1				
13	97706–04012	.TORNILLO, ROSCA CHAPA	1	1				
14	5PS–83340–01	DESTELLADOR DE LUZ TRAS.COMPL.	1	1				
15	1KH–83311–00	.BOMBILLA (12V-10W)	1	1				
16	5PW–8333A–00	.LENTES COMPLETO	1	1				
17	97706–04012	.TORNILLO, ROSCA CHAPA	1	1				
18	5PW–83318–00	SOPORTE DE DESTELLADOR 1	2	2				

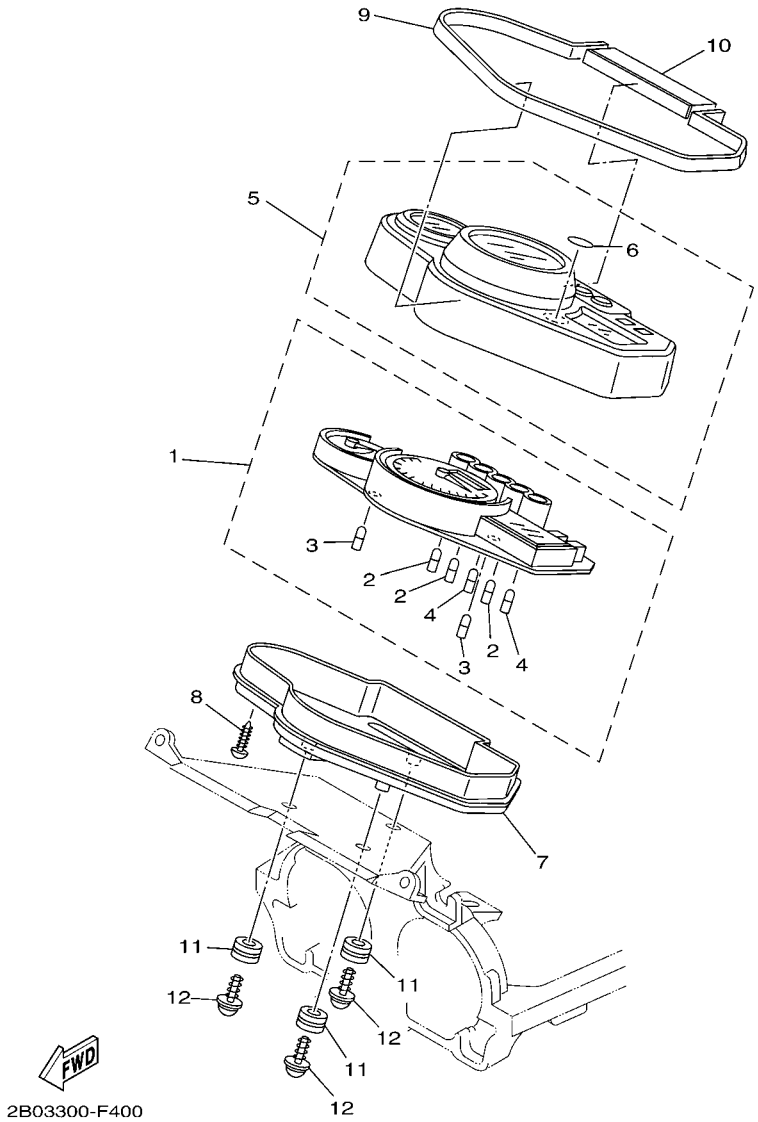

FIG. 40 MEDIDOR

REF. Nº	CODIGO Nº	DESCRIPCION	2B04	2B05				OBSERVACIONES
1	2B0–83570–40	VELOCIMETRO COMPLETO (KM/H)	1	1				
2	4YR–83517–00	.AMPOLLETA (12V-1.4W T5)	3	3				
3	4YR–83517–10	.AMPOLLETA (12V-2W T5)	2	2				
4	5PS–83517–00	.AMPOLLETA (12V-1.2W T5)	2	2				
5	2B0–8353E–01	CAJA DE MEDIDOR SUPERIOR	1	1				
6	5GT–2836B–00	.MARCA	1	1				
7	5PS–83572–00	CAJA DE VELOCIMETRO INFERIOR	1	1				
8	97707–40016	TORNILLO ROSCA HEMBRA	8	8				
9	5PS–83523–00	AMORTIGUADOR	1	1				
10	5PS–83541–00	AMORTIGUADOR	1	1				
11	5PS–83513–00	AMORTIGUADOR	3	3				
12	90164–05014	TORNILLO ROSCA HEMBRA	3	3				

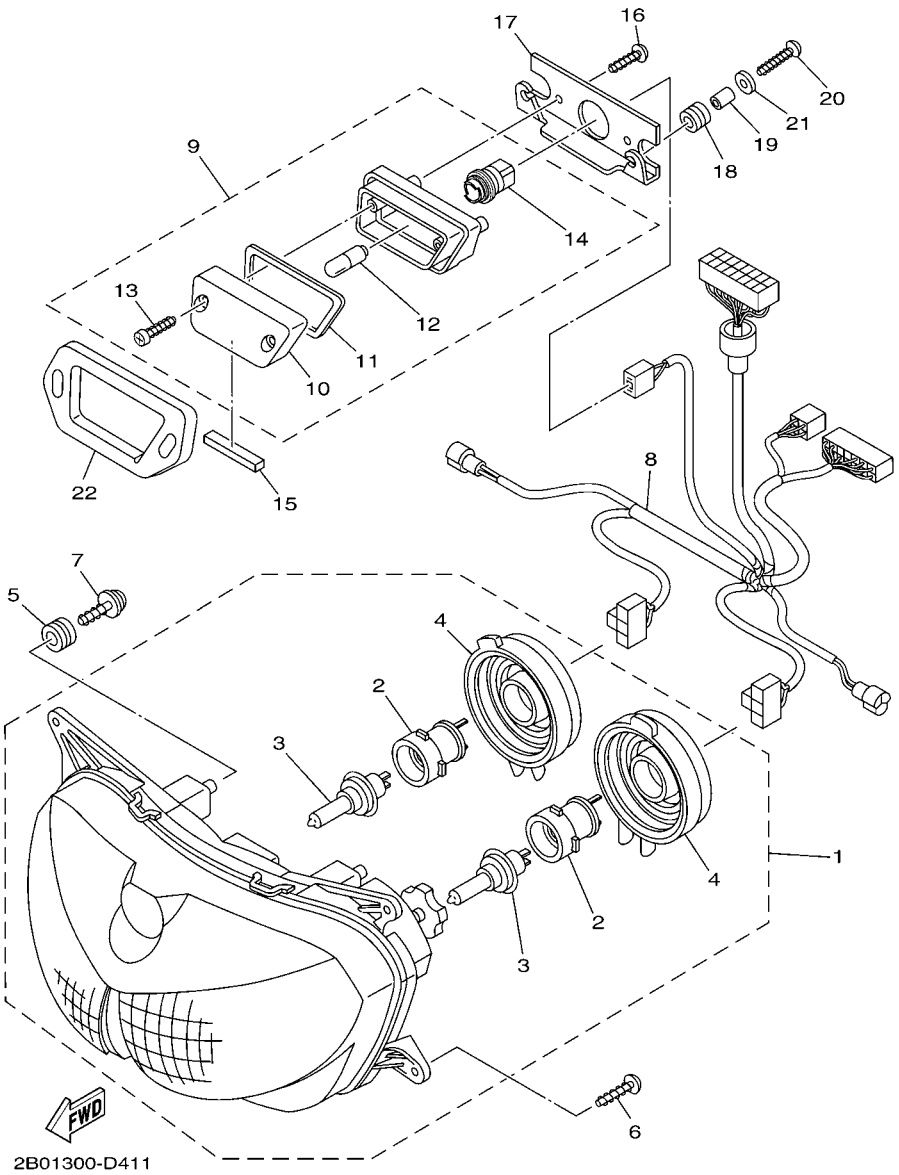

FIG. 41 FARO DELANTERO

REF. Nº	CODIGO Nº	DESCRIPCION	2B04	2B05				OBSERVACIONES
1	5PS–84310–00	UNIDAD DE FARO DELANTERO COMPL	1	1				
2	5PS–8411W–00	.ENCASTRE	2	2				
3	*	.BOMBILLA (12V-55W H7)	2	2				LM HALOGEN
4	4TV–84397–00	.CUBIERTA DE ENCASTRE	2	2				
5	5PS–83513–00	AMORTIGUADOR	4	4				
6	97707–50016	TORNILLO	4	4				
7	90164–05014	TORNILLO ROSCA HEMBRA	4	4				
8	2B0–84359–10	CABLE DE FARO DELANTERO	1	1				
9	3GM–84301–01	LUZ PILOTO COMPLETA 1	1	1				
10	3GM–84321–00	.LENTE COMPLETO	1	1				
11	3GM–84322–00	.EMPAQUETADURA DE LENTES	1	1				
12	47G–85353–00	.BOMBILLA(12V-5W)	1	1				
13	3GM–84192–10	.TORNILLO, ESPECIAL	2	2				
14	3GM–84346–00	.ENCASTRE DE LUZ PILOTO	1	1				
15	4XV–2834E–00	AMORTIGUADOR 3	1	1				
16	90167–05025	TORNILLO DE ROSCA HEMBRA	2	2				
17	4TX–8431R–00	SOPORTE	1	1				
18	90480–10517	TAPON	2	2				
19	90387–052U5	ESPACIADOR	2	2				
20	90167–05037	TORNILLO DE ROSCA HEMBRA	2	2				
21	90201–054K4	ARANDELA PLANA	2	2				
22	3GM–84367–50	AMORTIGUADOR FARO DELANTERO 2	1	1				

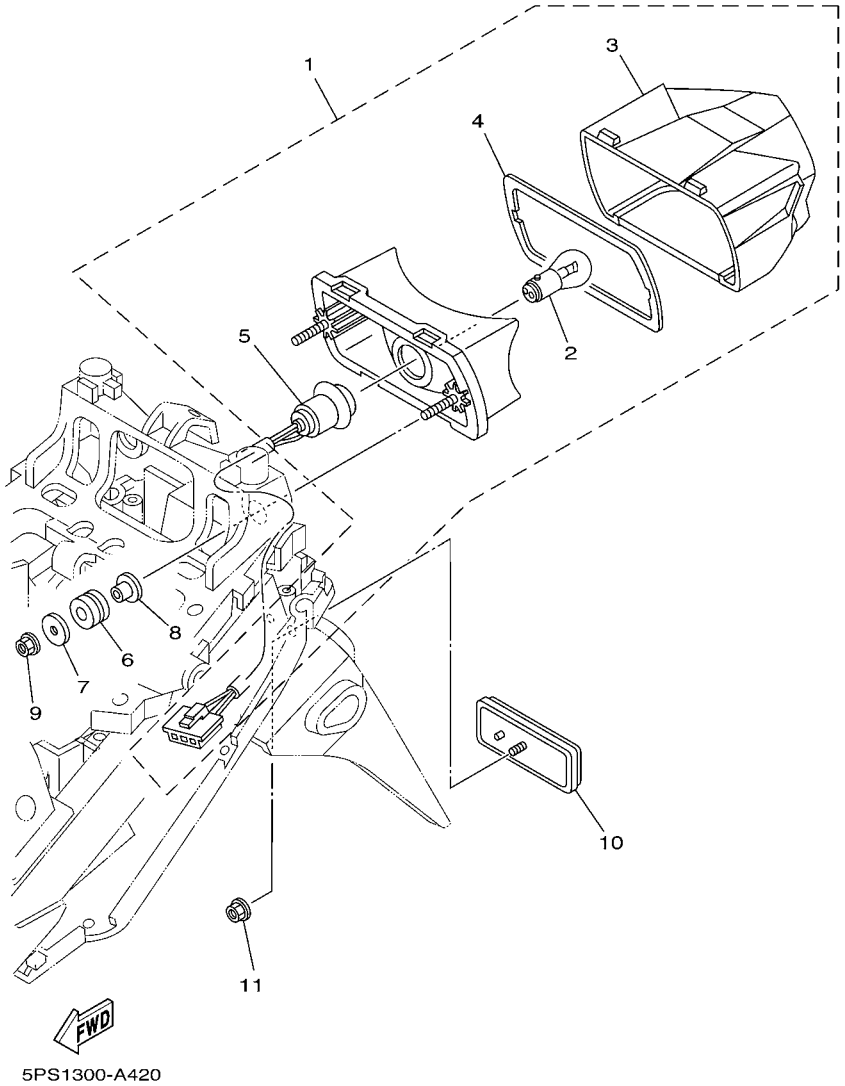

FIG. 42 LUZ DE COLA

REF. Nº	CODIGO Nº	DESCRIPCION	2B04	2B05				OBSERVACIONES
1	5PS–84710–00	UNIDAD FARO TRASERO COMPL.	1	1				
2	1A2–84714–41	.AMPOLLETA (12V-21/5W)	1	1				
3	5PS–84721–00	.LENTE DE FARO TRASERO	1	1				
4	47X–84723–00	.EMPAQUE LENTE FARO TRASERO	1	1				
5	5PS–84735–00	.CABLE COMPLETA	1	1				
6	90480–14323	TAPON	2	2				
7	90201–06071	ARANDELA PLANA	2	2				
8	90387–066Y6	ESPACIADOR	2	2				
9	95307–06600	TUERCA	2	2				
10	3Y6–85130–02	REFLECTOR TRASERO COMPLETO	1	1				
11	95707–05500	TUERCA DE BRIDA	1	1				

FIG. 43 INTERRUPTOR DE MANILLAR&PALANC

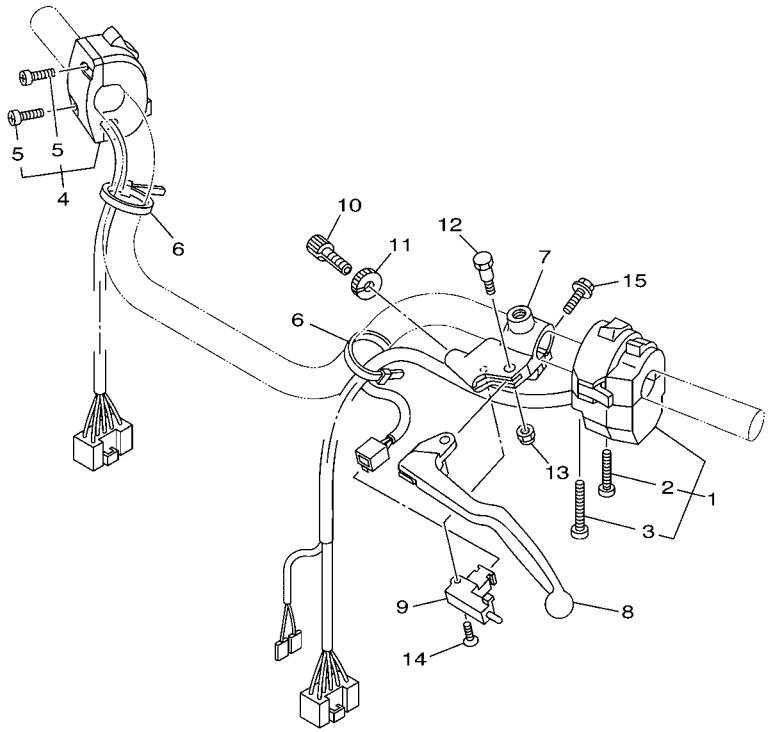

5PS6300-C430

REF. Nº	CODIGO Nº	DESCRIPCION	2B04	2B05				OBSERVACIONES
1	5PS–83969–10	INTERRUPTOR DE MANIJA 5	1	1				
2	98507–05030	.TORNILLO DE CABEZA PLANA	1	1				
3	98507–05040	.TORNILLO DE CABEZA PLANA	1	1				
4	5RT–83975–00	INTERRUPTOR DE MANIJA 2	1	1				
5	98507–05022	.TORNILLO DE CABEZA PLANA	2	2				
6	437–83936–01	BANDA DE CABLE DE INTERRUPTOR	2	2				
7	3YX–82911–01	SOPORTE DE LEVA 1	1	1				
8	3YX–83912–11	PALANCA 1	1	1				
9	3YX–82917–01	INTERRUPTOR	1	1				
10	90123–08096	PERNO	1	1				
11	90179–08148	TUERCA	1	1				
12	3YX–83945–00	PERNO DE PALANCA	1	1				
13	95607–06100	TUERCA AUTOBLOCANTE	1	1				
14	98707–03020	TORNILLO DE CABEZA PLANA	1	1				
15	95027–06020	PERNO, DE BRIDA	1	1				

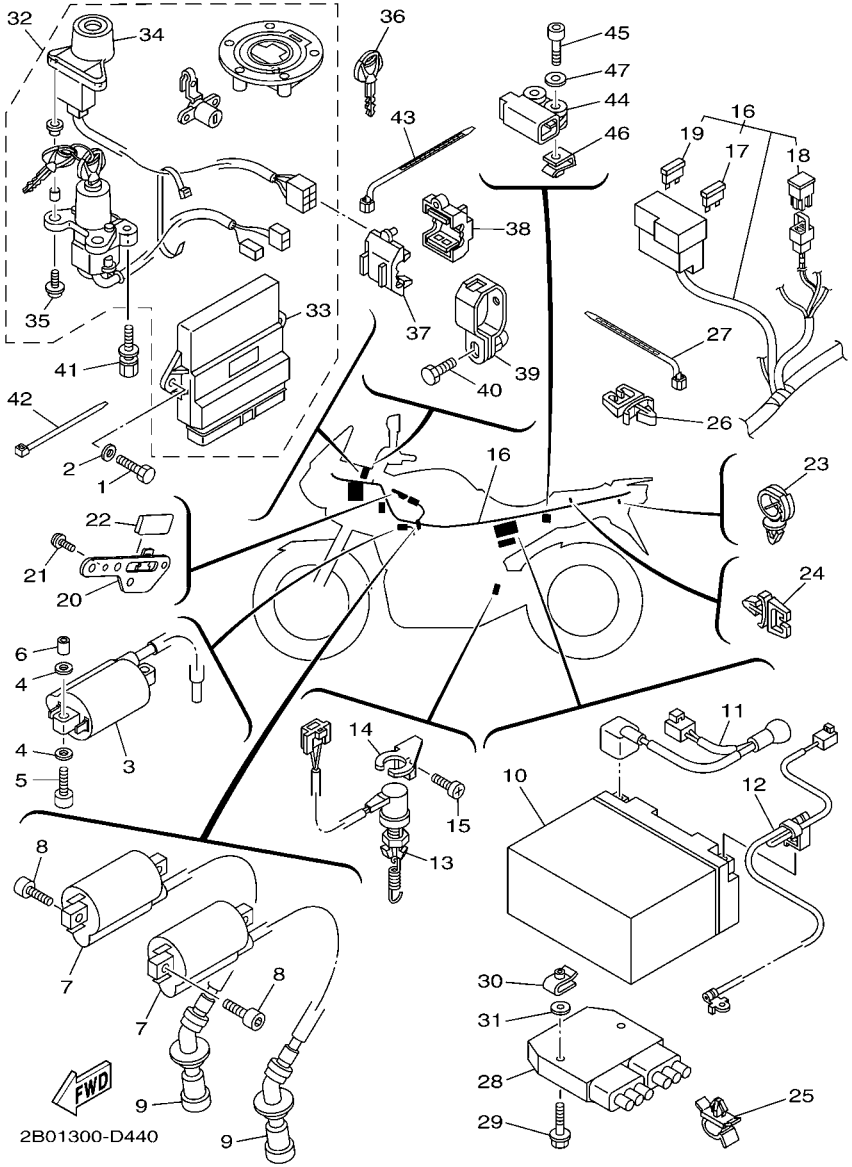

FIG. 44 EQUIPO ELECTRICO 1

REF. Nº	CODIGO Nº	DESCRIPCION	2B04	2B05				OBSERVACIONES
1	97024–06016	PERNO	2	2				
2	92904–06600	ARANDELA	2	2				
3	2B0–82310–00	BOBINA DE ENCENDIDO COMPLETA	1	1				
4	92990–05200	ARANDELA PLANA	4	4				
5	91380–05020	PERNO	2	2				
6	90445–05ME6	TUBO (L8)	1	1				
7	2UJ–82310–01	BOBINA DE ENCENDIDO COMPLETA	1	1				
8	91317–05016	PERNO	2	2				
9	5JW–82370–00	TAPON DE BUJIA COMPLT	2	2				
10	4TX–82100–02	BATERIA COMPLETA (GS GT12B-4)	1	1				
11	5PS–82115–00	CABLE CONDUCTOR POSITIVO	1	1				
12	2B0–82116–00	CABLE CONDUCTOR NEGATIVO	1	1				
13	5XT–82530–00	INTERRUPTOR DE PARADA COMPLETO	1	1				
14	5PS–2144G–00	SOPORTE DE INTERRUPTOR	1	1				
15	98507–06008	TORNILLO DE CABEZA PLANA	1	1				
16	2B0–82590–10	CONJUNTO DE CABLES	1	1				
17	5JJ–82151–30	.FUSIBLE (10A-BL)	7	7				
18	5PS–82151–00	.FUSIBLE (40A)	1	1				
19	5JJ–82151–20	.FUSIBLE (20A-BL)	3	3				
20	2B0–8257V–00	PLACA DE CONECTOR	1	1				
21	92017–05010	PERNO	2	2				
22	3FY–21575–01	SELLO 1	1	1				
23	90464–13249	BRIDA	1	1				
24	90464–07M56	BRIDA	1	1				
25	90464–14001	BRIDA	1	1				
26	90464–13249	BRIDA	1	1				
27	90464–13073	BRIDA	1	1				

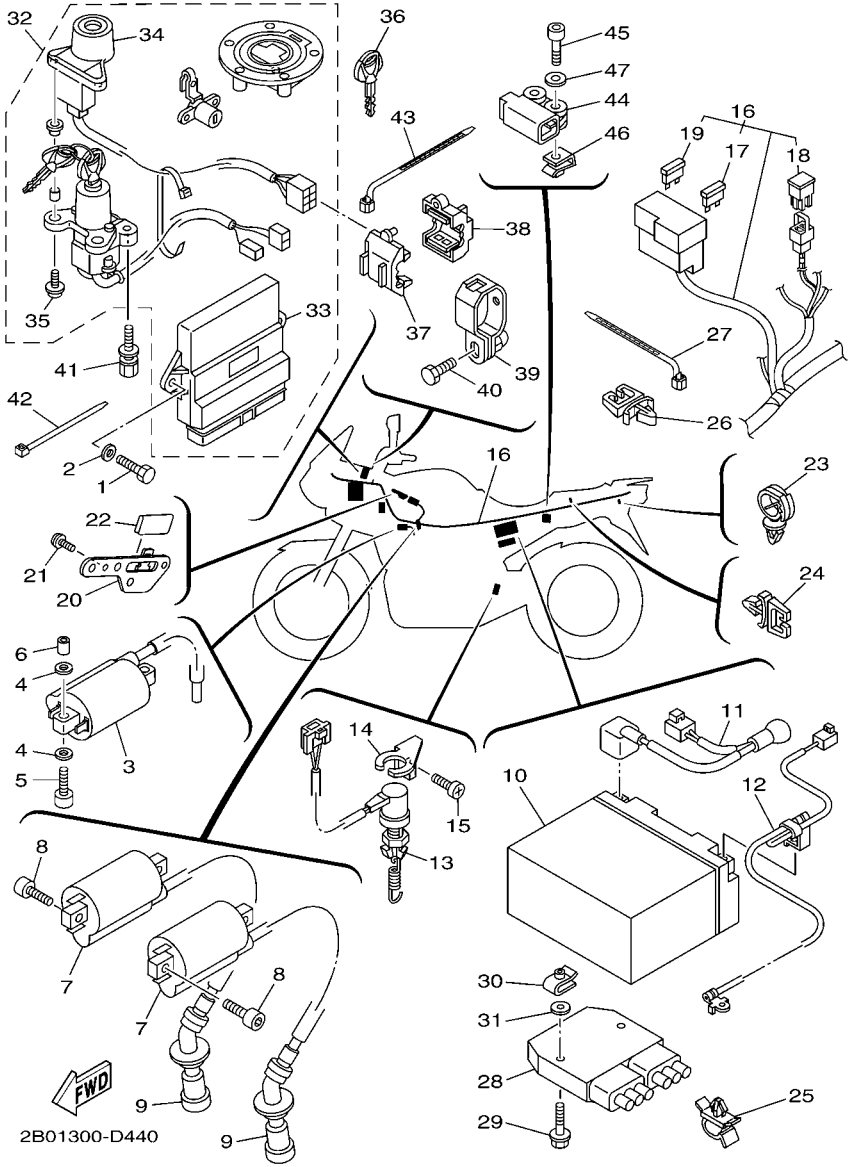

FIG. 44 EQUIPO ELECTRICO 1

REF. Nº	CODIGO Nº	DESCRIPCION	2B04	2B05				OBSERVACIONES
28	5JW–81960–00	RECTIFICADOR Y REGULADOR	1	1				
29	95807–06030	TORNILLO	2	2				
30	90183–06053	TUERCA DE RESORTE	2	2				
31	90202–05187	ARANDELA DE PLANA	2	2				
32	2B0–W8250–00	JUEGO DE INMOVILIZADOR	1	1				
33	2B0–8591A–00	.UNIDAD CONTROL	1	1				
34	5VS–8255P–00	.UNIDAD INMOVILIZADORA	1	1				
35	5SL–82113–01	.TORNILLO	2	2				
36	5SL–82511–08	BLANK KEY	1	1				AP
37	5VS–8258J–00	CAJA DE CONECTOR 1	1	1				
38	5VS–8259J–00	CAJA DE CONECTOR 2	1	1				
39	5VS–82729–00	SOPORTE DE CIERRE	1	1				
40	90101–06664	TORNILLO	1	1				
41	90109–080G5	PERNO	2	2				
42	90465–10098	BRIDA	1	1				
43	90464–25003	BRIDA	1	1				
44	5PS–82576–01	SENSOR ANGULO DE INCLINATION	1	1				
45	91317–04025	PERNO	2	2				
46	90183–04039	TUERCA DE RESORTE	2	2				
47	90201–047A2	ARANDELA PLANA	2	2				

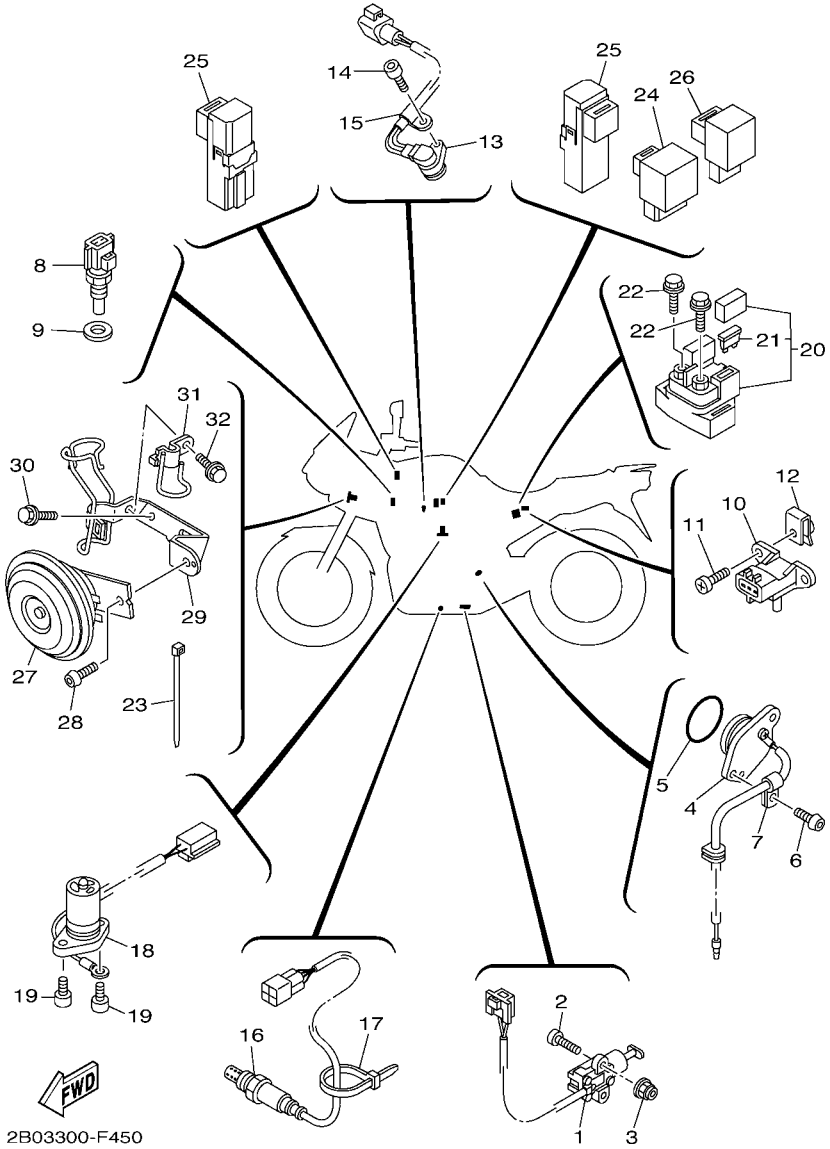

FIG. 45 EQUIPO ELECTRICO 2

REF. Nº	CODIGO Nº	DESCRIPCION	2B04	2B05				OBSERVACIONES
1	5RT–82566–61	INTERRUPTOR	1	1				
2	98507–05020	TORNILLO DE CABEZA PLANA	2	2				
3	95607–05200	TUERCA DE AUTO-CIERRE	2	2				
4	5PS–82540–00	INTERRUPTOR NEUTRAL COMPL	1	1				
5	93210–29196	ANILLO O	1	1				
6	90149–06018	TORNILLO DE REGLAJE	2	2				
7	90462–08017	BRIDA	1	1				
8	5PS–85790–00	TERMICA SENSORIO	1	1				
9	90430–12202	JUNTA	1	1				
10	1C7–82380–00	SENSOR DE PRESION	1	1				
11	95027–06014	PERNO, DE BRIDA	2	2				
12	90183–06053	TUERCA DE RESORTE	2	2				
13	5PS–85896–10	SENSOR DE LEVA	1	1				
14	90110–06124	TORNILLO ALLEN	1	1				
15	90465–08028	BRIDA	1	1				
16	5PS–8592A–10	SENSOR	1	1				
17	1UA–82591–00	BANDA	1	1				
18	5PS–85720–00	MEDIDOR DE NIVEL DE ACEITE	1	1				
19	91317–06012	PERNO	2	2				
20	4YR–81940–02	CONJUNTO ARRANCADOR RELEVO	1	1				
21	1AE–82151–00	.FUSIBLE (30A-BL)	2	2				
22	95027–06008	PERNO, DE BRIDA	2	2				
23	1UA–82591–00	BANDA	2	2				
24	5VK–81950–30	RELE COMPLETO	1	1				
25	5EA–81950–20	RELE COMPLETO	2	2				
26	3XV–83350–21	RELE DE DESTELLADOR COMPL.	1	1				
27	5PS–83371–00	BOCINA	1	1				

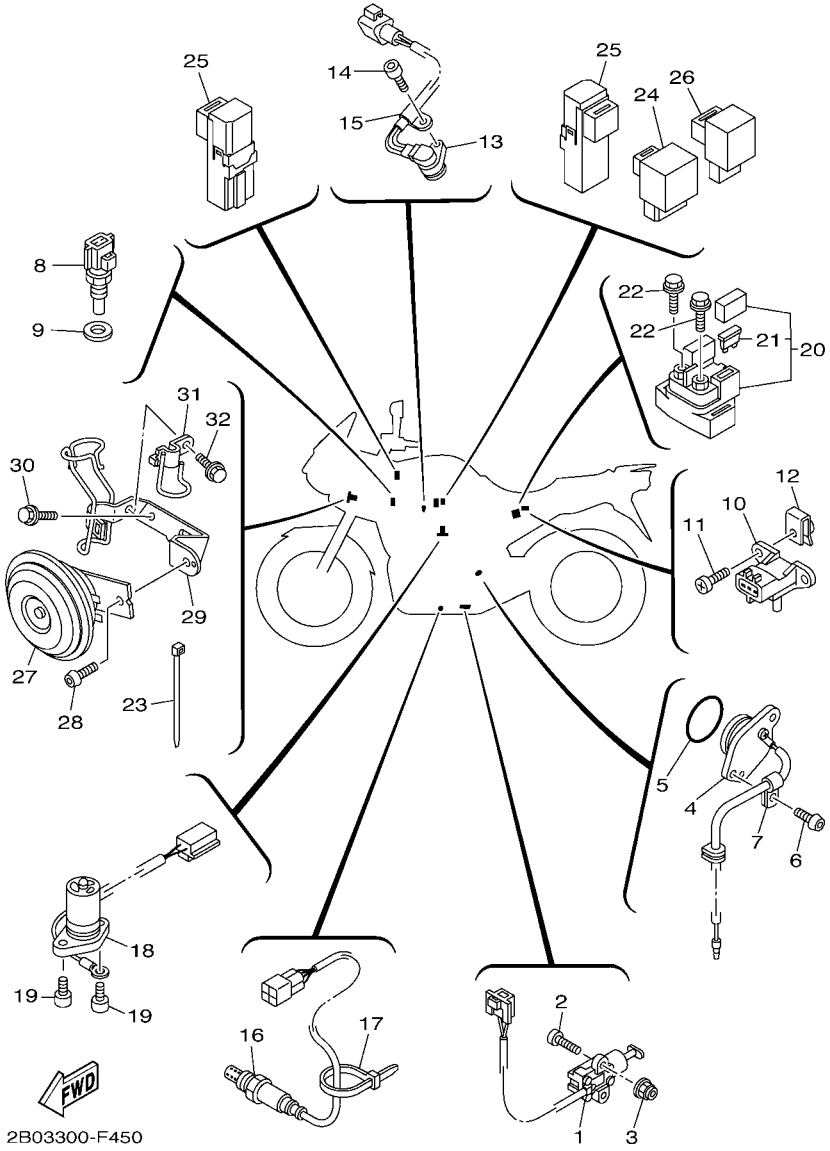

FIG. 45 EQUIPO ELECTRICO 2

REF. Nº	CODIGO Nº	DESCRIPCION	2B04	2B05				OBSERVACIONES
28	92017–06010	PERNO	1	1				
29	2B0–2317E–00	SOPORTE	1	1				
30	95027–06010	PERNO, DE BRIDA	2	2				
31	2B0–2317F–00	FUCO SOPORTE COMPL	1	1				
32	95827–06010	TORNILLO	1	1				

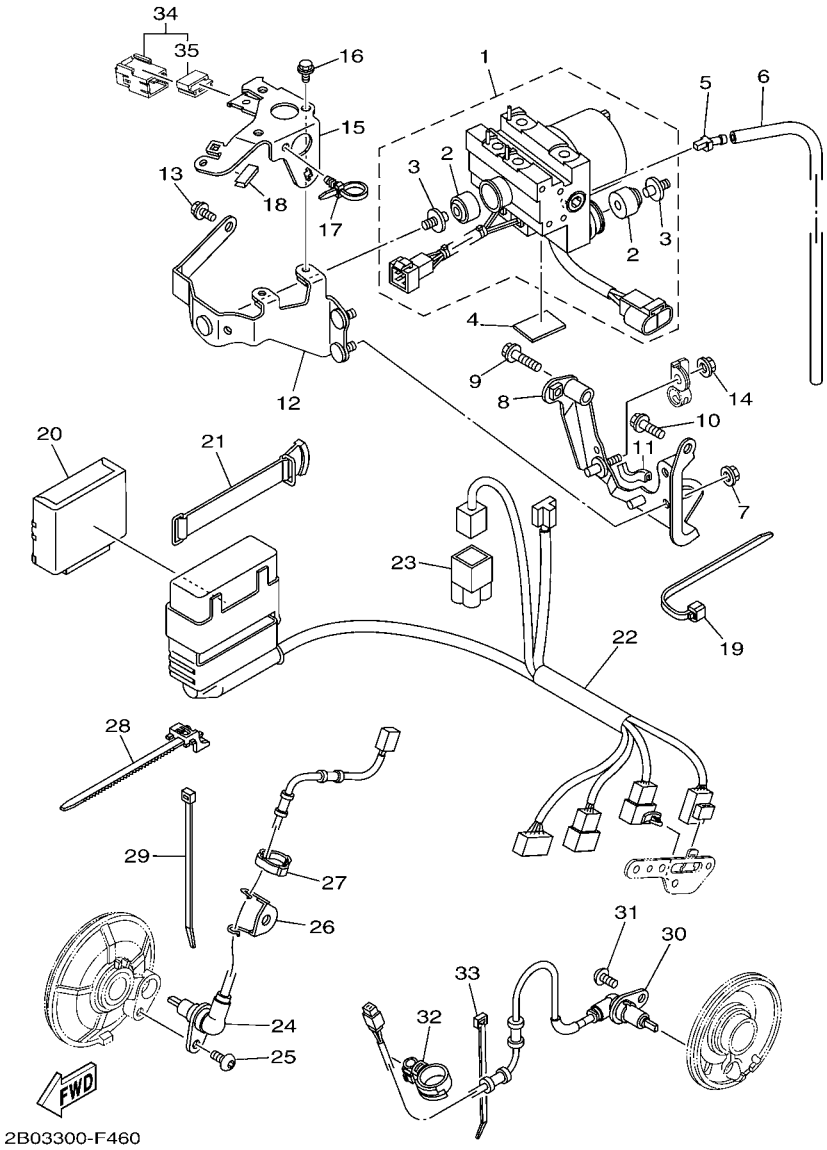

FIG. 46 EQUIPO ELECTRICO 3

REF. Nº	CODIGO Nº	DESCRIPCION	2B04	2B05				OBSERVACIONES
1	2B0–85930–09	UNIDAD DE HIDRAULICA	1	1				
2	5CG–85113–00	.AMORTIGUADOR	3	3				
3	5CG–2535E–00	.PERNO	3	3				
4	2AL–84553–00	AMORTIGUADOR	2	2				
5	5CG–24196–00	TAPON DE DRENAJE	1	1				
6	90445–10141	TUBO (L320)	1	1				
7	95607–08200	TUERCA DE AUTO-CIERRE	1	1				
8	2B0–2175T–00	SOPORTE 1	1	1				
9	95027–08030	PERNO, DE BRIDA	1	1				
10	95027–08025	PERNO, DE BRIDA	1	1				
11	3VD–24188–00	MOLDURA DEPOSITO COMBUST.	1	1				
12	2B0–2175U–00	SOPORTE 2	1	1				
13	95027–08012	PERNO, DE BRIDA	1	1				
14	95607–08200	TUERCA DE AUTO-CIERRE	2	2				
15	2B0–2117J–10	ANCLAJE CUBIERTA LATERAL 1	1	1				
16	95027–06010	PERNO, DE BRIDA	2	2				
17	90464–20005	BRIDA	1	1				
18	3MA–27491–00	PROTECTOR	1	1				
19	90464–15195	BRIDA	1	1				
20	2B0–85940–10	UNIDAD DE CONTROL COMPLETA	1	1				
21	7H3–82131–00	TIRANTE DE BATERIA	1	1				
22	2B0–85950–10	CONJUNTO DE CABLES	1	1				
23	3YA–82378–00	CONECTOR	1	1				
24	2B0–85970–00	CONJUNTO DE CABLES	1	1				
25	92014–08016	PERNO	1	1				
26	2B0–23317–00	SOSTEN DE CABLE	1	1				
27	90465–14310	BRIDA	4	4				

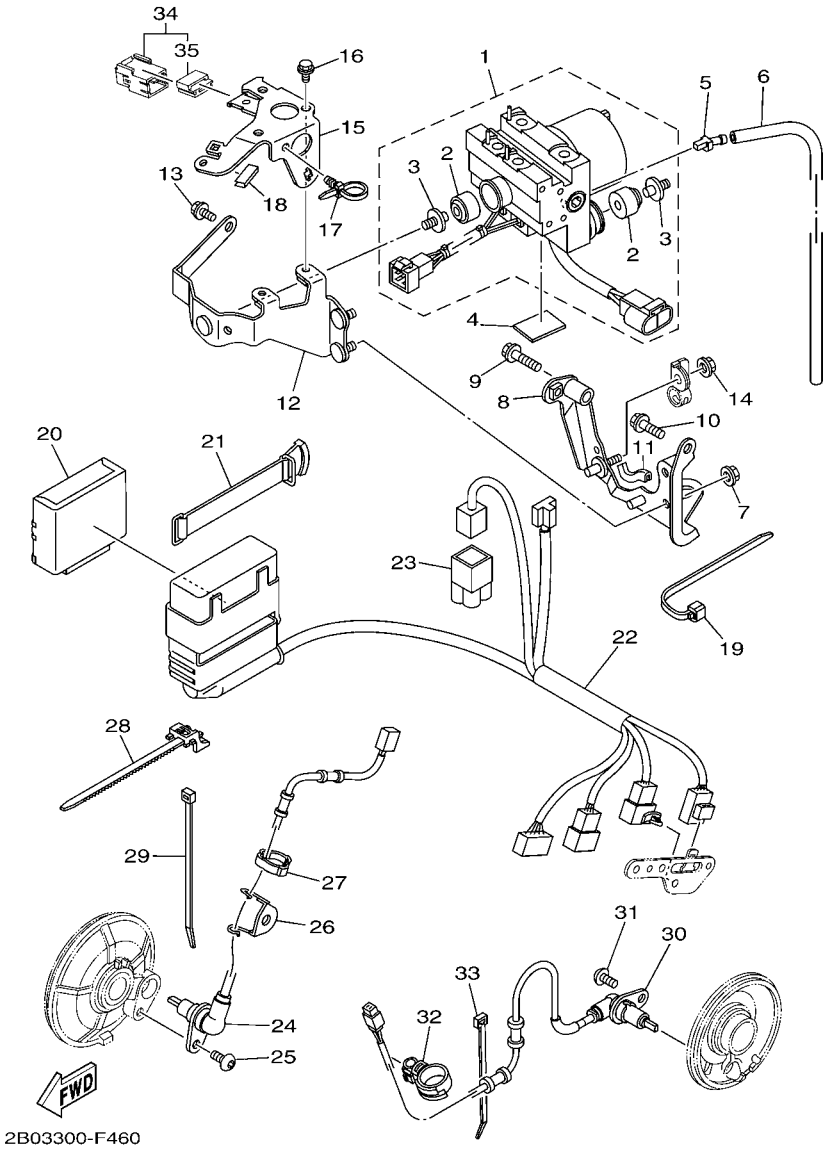

FIG. 46 EQUIPO ELECTRICO 3

REF. Nº	CODIGO Nº	DESCRIPCION	2B04	2B05				OBSERVACIONES
28	90464–25002	BRIDA	1	1				
29	90465–10098	BRIDA	1	1				
30	2B0–85980–00	CONJUNTO DE CABLES	1	1				
31	92014–08016	PERNO	1	1				
32	90464–20008	BRIDA	1	1				
33	90464–35132	BRIDA	1	1				
34	5EA–81950–20	RELE COMPLETO	1	1				
35	5EA–81952–00	.SOSTEN DE RELE	1	1				

INDICE NUMERICO

CODIGO Nº	REF. Nº
5PS–11101–00	B – 2
5PS–11101–10	B – 2
4KG–1111G–00	B – 3
583–11126–00	C – 9
3LD–11133–10	B – 2
3LD–11134–10	B – 2
5PS–11165–00	B – 2
5PS–11166–10	C – 2
5PS–11169–00	B – 2
5PS–11181–00	B – 2
5PS–11190–00	B – 2
5PS–11190–10	B – 2
5PS–11193–00	B – 3
214–11198–01	B – 13
5PS–11311–00	B – 4
5PS–11311–10	B – 4
5PS–11351–00	B – 4
3LD–11361–00	C – 6
5PS–11400–00	B – 5
3LD–11416–00	B – 5
3LD–11416–10	B – 5
3LD–11416–20	B – 5
3LD–11416–30	B – 5
3LD–11416–40	B – 5
3LD–11416–50	B – 5
3LD–11416–60	B – 5
4NX–11500–01	B – 5
4NX–11510–01	B – 5
3LD–11583–00	B – 5
3LD–11584–00	B – 5
5BE–11603–00	B – 5
5PS–11631–00	B – 5
5PS–11633–00	B – 5
5PS–11650–00	B – 5
3LD–11654–00	B – 5
3LD–11656–00	B – 5
3LD–11656–10	B – 5
3LD–11656–20	B – 5
3LD–11656–30	B – 5
3LD–12111–02	B – 6
3LD–12112–02	B – 6
3LD–12113–00	B – 6
1WG–12116–00	B – 6
3LD–12117–00	B – 6
3LD–12118–00	B – 6
51Y–12119–00	B – 6
5PS–12121–00	B – 6
1WG–12153–21	B – 6

CODIGO Nº	REF. Nº
1WG–12153–31	B – 6
3LD–12168–00	B – 6
3LD–12168–20	B – 6
3LD–12168–40	B – 6
3LD–12168–60	B – 6
3LD–12168–80	B – 6
3LD–12168–A0	B – 6
3LD–12168–F0	B – 6
3LD–12168–H1	B – 6
3LD–12168–K1	B – 6
3LD–12168–M1	B – 6
3LD–12168–R1	B – 6
3LD–12168–U1	B – 6
3LD–12168–W1	B – 6
3LD–12168–Y1	B – 6
3LD–12169–11	B – 6
3LD–12169–31	B – 6
3LD–12169–50	B – 6
3LD–12169–70	B – 7
3LD–12169–90	B – 7
3LD–12169–E0	B – 7
3LD–12169–G0	B – 7
3LD–12169–J0	B – 7
3LD–12169–L0	B – 7
3LD–12169–N0	B – 7
3LD–12169–T0	B – 7
5PS–12171–00	B – 8
3LD–12176–00	B – 8
5PS–12180–00	B – 8
5PS–12210–10	B – 8
5PS–12210–20	B – 8
5JW–12213–00	B – 8
5BE–12241–00	B – 8
3LD–12247–00	B – 8
3LD–12251–00	B – 8
5PS–12252–00	B – 8
5PS–12405–00	B – 10
1AE–12410–00	B – 11
4NX–12413–00	B – 11
5PS–12417–00	B – 11
5PS–12420–00	B – 9
5PS–12420–10	B – 9
1UF–12435–00	B – 10
1KT–12437–00	B – 10
3LD–12439–00	B – 9
5PS–1243A–00	C – 3
5PS–1243E–00	C – 3
5PS–1244E–00	B – 11

CODIGO Nº	REF. Nº
5PS–1244F–00	B – 11
3VD–12459–00	B – 9
5PS–12461–00	B – 10
4FL–12462–00	B – 10
5PS–12465–00	B – 10
5PS–12467–00	B – 10
5PS–12469–00	B – 9
5PS–12469–10	B – 9
5GV–1246E–00	B – 10
3LD–12481–00	B – 9
4NX–12482–00	B – 10
5Y9–12491–00	C – 2
	C – 3
1AA–12535–00	B – 10
5PS–12576–00	B – 10
5PS–12578–00	B – 10
5PS–12579–00	B – 11
5PS–12881–00	C – 3
3LD–13113–00	B – 13
3LD–13151–00	B – 13
5PS–13161–00	B – 12
3LD–13300–00	B – 12
4NX–13303–00	B – 12
5PS–13317–00	B – 14
3VD–13325–00	B – 12
5PS–13329–00	B – 12
3LD–13339–00	B – 12
3LD–13371–00	B – 12
5PS–13411–00	B – 12
3VD–13412–00	B – 12
5PS–13414–02	B – 13
3VD–13415–00	B – 12
3VD–13416–00	B – 13
5PS–13417–00	B – 13
5PS–13417–10	B – 13
5JX–13440–00	B – 12
5PS–13447–00	B – 12
5PS–13447–10	B – 12
5PS–13464–00	B – 13
5PS–13465–00	B – 13
11H–13490–00	B – 13
5PS–13586–00	B – 15
5PS–13750–30	C – 3
5PS–13761–00	C – 3
5PS–13906–00	C – 3
5PS–13907–01	E – 2
5PS–13938–00	C – 3
5PS–13971–00	D – 15

CODIGO Nº	REF. Nº
2B0–13972–00	D – 15
5PS–14103–00	C – 4
5JW–14104–00	C – 4
5PS–1410H–00	B – 15
5PS–14148–00	B – 15
8CC–14216–10	C – 3
5PS–14264–00	B – 15
5FL–14348–00	C – 4
5FL–14348–10	C – 4
5PS–14349–01	C – 3
5PS–14411–00	B – 15
5PS–14414–00	B – 15
5PS–14419–00	B – 15
5PS–14421–00	B – 15
5PS–14435–00	B – 15
5PS–1443E–00	C – 2
5PS–14451–00	B – 15
5PS–14452–00	B – 15
5PS–14453–00	B – 15
5PS–14463–00	B – 15
5PS–1446E–00	B – 15
5PS–14545–00	B – 15
5PS–14552–00	B – 15
5PS–14568–00	C – 2
5JW–14589–00	C – 3
5PS–14610–10	C – 5
3VD–14613–01	C – 5
5PS–14628–00	C – 5
2B0–14710–00	C – 5
5PS–14715–00	C – 5
2B0–14720–00	C – 5
5PS–14725–00	C – 5
2B0–14738–00	C – 5
2B0–14748–00	C – 5
5PX–14755–00	C – 5
5PS–1482K–00	B – 2
2B0–14834–00	C – 2
5PS–14840–00	C – 2
5PS–14881–00	C – 2
5PS–14882–10	C – 2
5PS–14890–00	B – 2
5PS–14899–00	B – 2
5DM–14936–00	C – 3
5PS–14987–00	C – 3
5PS–14996–00	C – 3
5PS–15100–00	C – 6
5PS–15100–10	C – 6
3LD–15118–00	C – 7

CODIGO Nº	REF. Nº
4G0–15138–00	C – 6
4H7–15138–00	B – 13
4XV–15138–00	C – 6
5PS–15163–00	C – 13
3LD–15191–00	C – 6
5PS–15316–00	C – 9
5PS–15326–00	C – 8
5PS–15335–00	C – 8
5PS–15337–00	C – 8
5PS–15411–00	C – 8
5PS–15411–10	C – 8
5PS–15416–00	C – 7
5PS–15416–10	C – 7
5PS–15419–00	C – 8
5PS–1541E–00	C – 8
5PS–15420–00	C – 8
5PS–15420–10	C – 8
5PS–15425–00	C – 9
5PS–15425–10	C – 9
5PS–15427–00	C – 9
5PS–15431–00	C – 9
5PS–15431–10	C – 8
5PS–15441–00	C – 9
5PS–15451–02	C – 8
5PS–15456–02	C – 7
5PS–15462–02	C – 9
5PS–15463–02	C – 9
3LD–15512–00	C – 10
5PS–15515–00	C – 10
3LD–15517–00	C – 10
26H–15521–00	C – 10
3LD–15590–02	C – 10
4TX–16150–02	C – 11
3VD–16154–00	C – 12
4H7–16154–00	C – 11
3VD–16164–00	C – 12
4NX–16181–00	C – 12
4TX–16321–00	C – 11
4H7–16321–02	C – 11
168–16324–00	C – 11
3J2–16324–00	C – 11
168–16325–00	C – 11
5PS–16340–00	C – 11
5EB–16351–01	C – 11
5PS–16356–00	C – 11
4TX–16371–00	C – 11
5PS–16382–00	C – 11
5PS–17121–00	C – 13

CODIGO Nº	REF. Nº
5PS–17131–00	C – 13
5PS–17151–00	C – 13
5PS–17161–00	C – 13
5PS–17211–00	C – 14
5PS–17221–00	C – 13
5PS–17231–00	C – 13
5PS–17241–00	C – 13
5PS–17251–00	C – 14
5PS–17261–00	C – 13
5PS–17401–00	C – 13
5PS–17402–00	C – 13
278–17424–01	C – 14
5PS–17460–00	C – 14
5PS–17471–00	C – 14
5PS–17653–00	C – 8
5PS–18101–00	D – 2
5PS–18110–00	D – 2
5EB–18113–00	D – 2
2H9–18115–00	D – 2
5PS–18116–00	D – 2
1D7–18127–00	D – 2
5PS–18130–00	D – 2
4SV–18140–00	C – 15
2H9–18154–00	D – 2
4NX–18175–00	C – 15
5PS–18511–00	C – 15
5PS–18512–00	C – 15
5PS–18513–00	C – 15
4XV–18531–00	C – 15
5PS–18531–00	C – 15
3LD–18536–00	C – 15
5PS–18540–00	C – 15
4UN–18542–00	C – 15
4UN–18566–00	C – 15
2B0–21110–20	D – 3
2B0–21110–40	D – 3
5PS–2117E–00	D – 6
1B3–2117G–00	D – 4
52W–2117G–00	F – 2
2B0–2117J–10	G – 3
5PS–2117K–00	E – 3
5PS–2117M–00	D – 3
5PS–2117V–00	D – 3
5PS–2117W–00	D – 3
5PS–21190–11	D – 3
5PS–21190–21	D – 3
1JK–21268–00	D – 4
5BM–21268–00	B – 14

INDICE NUMERICO

CODIGO Nº	REF. Nº
5PS–2132F–00	D – 7
4XV–21376–00	D – 6
5PS–2139E–00	D – 7
5PS–2139X–00	E – 2
5PS–2144G–00	F – 13
5PS–21489–00	D – 3
4C8–21495–00	D – 3
4X7–2149Y–00	C – 2
5PS–21511–00–P1	D – 5
5PS–21511–00–P6	D – 5
4NX–21541–00	D – 14
5PA–21568–00	D – 15
3FY–21575–01	F – 13
5VS–21578–10	D – 5
2B0–21611–00	D – 5
5PS–2162A–00	D – 5
51Y–21639–00	D – 6
5PS–21639–00	D – 5
5PS–2163A–00	D – 5
5JW–21647–01	D – 5
5PS–21649–00	D – 6
5PS–21650–00	D – 10
5PS–21651–00–P1	D – 6
5PS–21651–00–P6	D – 6
5PS–21651–00–P9	D – 6
5BM–21652–00	B – 14
5PS–21654–00	D – 7
5PS–21654–10	D – 7
5PS–21668–00	D – 10
5PS–21711–00	D – 8
15A–21717–00	F – 3
1J7–21717–00	D – 8
4TX–21717–00	F – 2
2B0–21719–00	D – 8
5PS–21721–00	D – 8
5PS–21750–10	B – 14
2B0–2175T–00	G – 3
2B0–2175U–00	G – 3
5PS–21761–00	B – 14
2B0–2177F–00	F – 4
5PS–2178A–00	F – 2
2B0–21816–00	D – 8
26H–21828–00	D – 8
2B0–21871–00	D – 8
5EB–21875–00	D – 8
5PS–22110–10	D – 9
5PS–22110–20	D – 9
5EB–22123–00	D – 9

CODIGO Nº	REF. Nº
5PS–22125–00	D – 9
5EB–22127–00	D – 9
3FV–22128–00	D – 9
5PS–22141–00	D – 9
5PS–22151–00	D – 10
5PS–2217A–00	D – 9
5PS–2217M–00	D – 9
5PS–22184–00	D – 9
5PS–22210–10	D – 11
5PS–22210–20	D – 11
4GY–22216–30	D – 11
5PS–22219–01	D – 11
5PS–23102–30	D – 13
5PS–23102–40	D – 13
5PS–23103–30	D – 13
5PS–23103–40	D – 13
5PS–23110–10	D – 13
5PS–23111–00	D – 13
4GY–23118–10	D – 13
4KM–23123–01	D – 12
3GM–23125–00	D – 13
5PS–23126–30	D – 13
5PS–23126–40	D – 13
5PS–23136–30	D – 13
5PS–23136–40	D – 13
5PS–23141–10	D – 13
4PU–23144–00	D – 13
4PU–23145–01	D – 13
4V4–23146–L0	D – 13
3FV–23149–00	D – 13
3LR–23149–00	D – 13
4V4–23153–L0	D – 13
509–23158–L0	D – 13
5PS–23170–10	D – 13
3GM–23171–00	D – 13
5PS–23173–00	D – 13
2B0–2317E–00	G – 2
2B0–2317F–00	G – 2
278–23181–50	D – 13
2B0–23317–00	G – 3
4PU–2331G–00	D – 14
5PS–23340–10	D – 14
5PS–23340–20	D – 14
2B0–23389–00	D – 12
4XV–23415–01	D – 12
5VY–23418–00	D – 12
5PS–23435–20	D – 12
4H7–23441–01–98	D – 12

CODIGO Nº	REF. Nº
3FV–23462–00	D – 12
12R–23469–00	D – 12
5PW–2413B–00	D – 15
5PS–2414H–10	E – 2
3ME–2415E–01	D – 15
5PS–24181–00	D – 15
5PS–24181–10	D – 15
5EB–24183–00	D – 15
5PS–24183–00	D – 15
5PS–24186–00	D – 15
3VD–24188–00	G – 3
4BP–24188–00	E – 2
5JX–24188–00	B – 14
5PS–24191–00	D – 15
2B0–24192–00	D – 15
5CG–24196–00	G – 3
5JW–24311–00	C – 4
5PS–24318–00	E – 2
68V–24376–00	C – 3
5JW–24486–00	D – 15
5JW–24491–00	D – 15
5JJ–24602–00	E – 2
5PS–2470F–20	E – 3
5PS–2471K–00–P1	D – 6
5PS–2471K–00–P6	D – 5
5PS–2471K–00–P8	D – 5
5PS–24723–00	D – 6
5PS–24723–10	D – 6
5PS–24724–00	D – 6
5PS–24724–10	D – 6
4HM–24728–00	E – 3
5PS–2472K–00–P1	D – 6
5PS–2472K–00–P6	D – 6
5PS–2472K–00–P8	D – 6
5PS–24730–20	E – 3
5LV–24737–00	E – 3
22W–24741–00	E – 3
5PS–24741–00	E – 3
5PS–24746–00	E – 3
5JJ–2475X–01	E – 3
5PS–24773–10	D – 6
5PS–24773–20	D – 6
4BP–24780–00	E – 3
5PS–2478E–00	E – 3
5PS–24792–00	E – 3
5EA–25117–00	E – 4
2B0–2517A–00	E – 4
4XV–25181–10	E – 4

CODIGO Nº	REF. Nº
5LV–25317–00	E – 6
5CG–2535E–00	G – 3
5EA–25364–00	E – 6
5PS–25366–00	E – 6
5PS–25376–00	E – 6
4FM–25377–00	E – 6
2B0–2537A–00	E – 7
4FM–25381–20	E – 6
5EB–25388–00	E – 6
5PS–25389–00	E – 6
5MT–25398–00	E – 4
	E – 6
5MT–25398–10	E – 4
	E – 6
5MT–25398–20	E – 4
	E – 6
5PS–25442–00	E – 6
2D1–2580T–00	E – 5
5SL–2580T–00	E – 5
2B0–2580U–00	E – 5
5D0–2580U–00	E – 5
2B0–2580W–00	E – 8
2B0–2581J–00	E – 14
2B0–2581K–00	E – 14
5PX–2581T–00	E – 5
5GJ–25827–00	E – 8
5VX–2582A–00	E – 14
4JH–2582W–00	E – 8
2B0–25834–00	E – 10
2B0–2583V–00	E – 14
2B0–2584B–00	E – 10
2B0–2584C–00	E – 10
5SL–25852–00	E – 14
5VS–25852–00	E – 10
5SL–25854–00	E – 14
5VS–25854–00	E – 10
5SL–25855–00	E – 14
5VS–25855–00	E – 10
4BP–2585F–00	E – 14
5VS–25867–00	E – 10
2B0–25872–00	E – 10
2B0–25875–00	E – 15
2R8–25876–20	E – 10
2B0–2587A–00	E – 11
2B0–25886–00	D – 10
2B0–25887–00	D – 10
2B0–25888–00	E – 14
2B0–2588F–00	E – 10

CODIGO Nº	REF. Nº
2B0–2588G–00	E – 11
5VS–25894–00	E – 14
2B0–25895–00	E – 14
5VS–2589F–00	E – 10
5VS–2589H–00	E – 10
5JW–25914–10	E – 8
4SV–25919–00	E – 5
5JW–25919–00	E – 8
4SV–25924–00	E – 5
3GM–25925–00	E – 5
4TT–25937–00	E – 8
5PS–26111–10	E – 9
5PS–26133–20	E – 9
5PS–26240–00	E – 9
5JW–26241–00	E – 9
51J–26246–01	E – 9
4TX–26280–50	E – 9
4KG–26281–00	E – 9
3XW–26282–01	E – 9
4TX–26290–50	E – 9
5PS–26302–00	E – 9
5VS–26332–00	E – 10
5PS–26335–01	E – 9
1E6–26342–00	E – 9
128–27114–00	E – 12
5PS–27211–00	E – 14
5PS–27212–00	E – 14
47X–27222–00	E – 14
5PS–27311–00	E – 12
5JJ–27315–00	E – 12
5PS–27321–00	E – 12
5PS–27323–00	E – 12
5PS–27352–00	E – 12
3YX–27413–00	E – 12
36Y–27414–00	C – 5
5LV–27431–01	E – 13
5JW–27434–00	D – 2
5JJ–27437–01	E – 13
5LV–27441–01	E – 13
5PS–27442–00	E – 13
5PS–27443–00	E – 13
4BH–27451–01	E – 12
4BH–27461–01	E – 12
3MA–27491–00	G – 3
5PS–28100–01	D – 7
2B0–28199–S2	D – 7
3TB–28217–00	D – 8
5PS–28217–00	E – 2

CODIGO Nº	REF. Nº
5PS–28217–00	F – 2
2B0–28321–00	F – 4
2B0–28322–10	F – 2
5PS–28331–00	F – 3
5PS–28332–00	F – 2
2B0–28336–00	F – 2
2B0–28337–00	F – 2
5PS–28345–00	F – 2
1AE–2834E–00	D – 5
4XV–2834E–00	F – 10
5PS–28356–01	F – 2
2B0–28357–00	F – 4
5PS–2835G–00–P1	F – 2
5PS–2835G–00–P4	F – 2
5PS–2835G–00–P6	F – 2
5PS–2835U–00–P1	F – 3
5PS–2835U–00–P9	F – 3
5PS–2835U–00–PA	F – 3
5PS–2835V–00–P1	F – 3
5PS–2835V–00–P9	F – 3
5PS–2835V–00–PA	F – 3
5PS–2836A–00	F – 4
5GT–2836B–00	F – 9
5LV–2836B–01	F – 4
5PS–2836E–00	F – 4
5PS–2836K–00	F – 2
5PS–28372–00	E – 2
5PS–28373–00	F – 3
5PS–2837N–01	F – 4
5PS–2837R–00	F – 4
5PS–28381–01	F – 2
5PS–28391–A0	F – 4
5PS–28391–D0	F – 4
5PS–28391–E0	F – 5
5PS–28392–A0	F – 5
5PS–28392–D0	F – 5
5PS–28392–E0	F – 5
5PS–28393–60	F – 4
5PS–28393–70	F – 4
5PS–28394–60	F – 4
5PS–28394–70	F – 4
5PS–28396–00	F – 3
5PS–28397–00	F – 3
5PS–81410–00	F – 6
5PS–81450–00	F – 6
3AJ–81801–00	F – 7
3AJ–81809–00	F – 7
1HX–81815–00	F – 7

INDICE NUMERICO

CODIGO Nº	REF. Nº
3AJ–81826–00	F – 7
4XV–8182A–00	F – 7
3AJ–81830–00	F – 7
11H–81844–00	F – 7
1FK–81847–00	F – 7
4G0–81871–00	F – 7
3LD–81890–00	F – 7
4YR–81940–02	F – 15
5EA–81950–20	F – 15
	G – 4
5VK–81950–30	F – 15
5EA–81952–00	G – 4
5JW–81960–00	F – 14
4TX–82100–02	F – 13
5SL–82113–01	F – 14
5PS–82115–00	F – 13
2B0–82116–00	F – 13
3VD–82131–00	D – 5
7H3–82131–00	G – 3
1AE–82151–00	F – 15
5PS–82151–00	F – 13
5JJ–82151–20	F – 13
5JJ–82151–30	F – 13
2B0–82310–00	F – 13
2UJ–82310–01	F – 13
5JW–82370–00	F – 13
3YA–82378–00	G – 3
1C7–82380–00	C – 3
	F – 15
5PS–82386–00	B – 15
5PS–82509–01	C – 3
5SL–82511–08	F – 14
5XT–82530–00	F – 13
5PS–82540–00	F – 15
5VS–8255P–00	F – 14
5RT–82566–61	F – 15
5PS–82576–01	F – 14
2B0–8257V–00	F – 13
5VS–8258J–00	F – 14
2B0–82590–10	F – 13
1UA–82591–00	F – 15
5VS–8259J–00	F – 14
5VS–82729–00	F – 14
3YX–82911–01	F – 12
3YX–82917–01	F – 12
5PW–83310–01	F – 8
1KH–83311–00	F – 8
5PW–83318–00	F – 8

CODIGO Nº	REF. Nº
5PW–83320–01	F – 8
5PS–83330–01	F – 8
5PW–8333A–00	F – 8
5PS–83340–01	F – 8
5PW–8334A–00	F – 8
3XV–83350–21	F – 15
5PS–83371–00	F – 15
5PS–8338L–00	C – 9
5PS–83513–00	F – 9
	F – 10
4YR–83517–00	F – 9
5PS–83517–00	F – 9
4YR–83517–10	F – 9
5PS–83523–00	F – 9
2B0–8353E–01	F – 9
5PS–83541–00	F – 9
2B0–83570–40	F – 9
5PS–83572–00	F – 9
4BH–83591–00	B – 15
2B0–83599–00	E – 7
3YX–83912–11	F – 12
5VS–83922–00	E – 10
437–83936–01	F – 12
3YX–83945–00	F – 12
5PS–83969–10	F – 12
5RT–83975–00	F – 12
4HM–83980–00	E – 10
5PS–8411W–00	F – 10
5PS–84163–00	F – 2
3GM–84192–10	F – 10
3GM–84301–01	F – 10
5PS–84310–00	F – 10
4TX–8431R–00	F – 10
3GM–84321–00	F – 10
3GM–84322–00	F – 10
3GM–84346–00	F – 10
2B0–84359–10	F – 10
3GM–84367–50	F – 10
4TV–84397–00	F – 10
2AL–84553–00	G – 3
5PS–84710–00	F – 11
1A2–84714–41	F – 11
5PS–84721–00	F – 11
47X–84723–00	F – 11
5PS–84735–00	F – 11
5CG–85113–00	G – 3
3Y6–85130–02	F – 11
47G–85353–00	F – 10

CODIGO Nº	REF. Nº
5PS–85720–00	F – 15
5PS–85790–00	F – 15
3P6–85885–00	C – 3
5PS–85896–10	F – 15
2B0–8591A–00	F – 14
5PS–8592A–10	F – 15
2B0–85930–09	G – 3
2B0–85940–10	G – 3
2B0–85950–10	G – 3
2B0–85970–00	G – 3
2B0–85980–00	G – 4
5VS–W0041–00	E – 10
5PS–W0042–50	E – 14
5SL–W0045–00	E – 5
5PS–W0046–00	E – 8
5JW–W0047–00	E – 8
3GM–W0047–10	E – 5
3MA–W0047–10	E – 5
1J3–W0048–00	E – 5
5VS–W0048–00	E – 5
5GM–W0048–01	E – 8
4SV–W0057–00	E – 5
5JW–W0057–00	E – 8
4SV–W0057–10	E – 5
2TV–W2470–00	E – 3
2B0–W2516–00–98	E – 4
2B0–W2516–00–P0	E – 4
2B0–W2533–00–98	E – 6
2B0–W2533–00–P0	E – 6
2B0–W2587–00	E – 10
2B0–W8250–00	F – 14
5PS–YK241–10–P1	D – 15
5PS–YK241–10–P8	D – 15
5PS–YK241–10–P9	D – 15
90101–06664	F – 14
90101–08662	E – 12
90101–08766	E – 6
90101–10659	D – 10
90101–12749	D – 9
90105–06020	D – 5
90105–06153	B – 2
90105–06790	E – 10
90105–06791	E – 10
90105–07004	B – 8
90105–08047	D – 3
90105–08113	E – 8
90105–10032	D – 3
90105–10113	D – 3

CODIGO Nº	REF. Nº
90105–10323	D – 9
90105–10402	D – 11
90105–10560	C – 6
90105–105A7	E – 5
90105–12584	B – 5
90109–06044	B – 3
90109–06045	B – 3
90109–06046	D – 7
90109–06056	B – 14
90109–064G6	E – 5
90109–065A8	C – 8
90109–066F0	B – 3
90109–080G5	F – 14
90109–08170	C – 5
90109–08174	E – 12
90109–082F5	E – 12
90109–083G4	E – 8
90109–087F1	C – 5
90110–05011	F – 6
90110–05014	E – 2
90110–05112	E – 2
90110–05201	F – 3
90110–06006	C – 9
90110–06018	B – 12
90110–06027	C – 15
90110–06042	F – 6
90110–06060	C – 15
90110–06093	B – 14
90110–06124	F – 15
90110–06200	D – 5
90110–06226	E – 12
90110–08220	E – 13
90111–06037	B – 10
90111–08005	D – 6
90111–08006	D – 6
90111–12001	D – 3
90116–10575	E – 6
90119–05062	D – 5
90119–06044	B – 10
	F – 3
90119–06096	D – 10
90119–06108	D – 5
90119–06117	D – 10
90119–06118	D – 5
90119–06214	C – 2
90119–06228	D – 12
90123–08096	F – 12
90149–05009	B – 2

CODIGO Nº	REF. Nº
90149–05009	C – 9
90149–05299	F – 4
90149–05321	C – 15
90149–06018	F – 15
90149–06026	C – 10
90149–10002	D – 3
90150–05024	F – 2
90151–06008	C – 7
90151–06011	C – 13
90153–06029	B – 4
90157–05079	E – 12
90157–05134	E – 13
90159–06033	D – 8
90159–06123	C – 11
90164–05014	F – 9
	F – 10
90167–05025	F – 10
90167–05037	F – 10
90167–05076	F – 2
90167–05080	F – 2
90170–06183	E – 3
90170–06228	D – 2
90170–20008	C – 11
90176–08063	D – 8
90176–28083	D – 12
90179–05523	F – 2
90179–06009	D – 5
90179–06635	E – 3
90179–08148	F – 12
90179–08410	C – 5
90179–09379	B – 5
90179–10002	D – 3
90179–10414	B – 2
90179–10696	D – 3
90179–22011	C – 14
90179–30691	D – 12
90183–04039	F – 14
90183–05042	F – 2
90183–05061	F – 2
90183–06053	F – 14
	F – 15
90185–12119	D – 9
90185–18167	D – 9
90185–24007	E – 6
90201–03644	F – 4
90201–04018	D – 5
90201–047A2	F – 14
90201–054K4	F – 10

CODIGO Nº	REF. Nº
90201–06043	D – 7
90201–06071	B – 10
	F – 11
90201–066F0	C – 6
90201–08083	E – 14
90201–08087	C – 6
90201–080H1	D – 2
90201–081R9	E – 12
90201–08455	D – 8
90201–08753	C – 5
90201–10119	C – 12
90201–101J1	D – 10
	D – 11
90201–103M4	B – 2
90201–11597	C – 6
90201–12013	D – 2
90201–12163	C – 11
90201–121H0	B – 5
90201–12575	D – 2
90201–127E1	B – 9
90201–14215	E – 14
90201–186M4	D – 9
90201–191J4	D – 2
90201–20008	C – 14
90201–25020	E – 6
90201–25M72	C – 14
90201–281U8	D – 12
90201–30008	C – 10
90202–05187	F – 14
90202–05224	F – 2
90202–06170	D – 5
90202–30235	D – 12
90206–08051	D – 7
90206–12074	D – 2
90209–21332	C – 13
90209–21351	C – 13
90209–22352	C – 13
90209–28330	C – 13
90209–28331	C – 13
90209–29329	C – 13
90215–20004	C – 11
90215–30233	C – 14
90240–08013	E – 14
90240–08084	E – 12
90267–32018	F – 2
90267–32192	F – 4
90267–40110	D – 5
90269–06081	D – 6

INDICE NUMERICO

CODIGO Nº	REF. Nº
90269–07001	D – 3
90269–07077	F – 4
90269–08001	D – 10
90280–05029	B – 5
90338–06018	E – 3
90338–08008	D – 3
90338–08163	D – 6
90338–08226	D – 5
90338–10132	F – 3
90338–10150	B – 2
90338–11125	F – 3
90338–24112	D – 3
90340–14013	C – 9
90340–14128	C – 9
90340–14132	B – 13
90340–18101	B – 2
90340–32004	C – 9
90340–32123	C – 9
90383–14001	E – 13
90387–052U5	F – 10
90387–06014	E – 13
90387–0602Y	D – 15
90387–06048	D – 6
90387–0614M	B – 10
90387–061W6	D – 15
90387–06372	D – 10
90387–065T2	D – 5
90387–066Y6	F – 11
90387–06761	B – 14
90387–0714B	B – 10
90387–08038	D – 8
90387–085N0	B – 14
90387–1012B	D – 10
90387–106W6	B – 13
90387–120W5	B – 12
90387–126Y1	D – 9
90387–127W0	D – 10
90387–130W6	B – 14
90387–14003	D – 3
90387–2200T	E – 4
90387–25004	C – 13
90387–2511A	C – 14
90387–2513E	C – 13
90387–2802W	C – 13
90387–32003	C – 13
90401–10002	B – 12
90401–10020	E – 10
	E – 15

CODIGO Nº	REF. Nº
90401–10172	E – 10
	E – 15
90430–06014	B – 4
	B – 9
90430–08119	B – 2
90430–09002	C – 3
90430–10005	E – 10
	E – 15
90430–10188	B – 13
90430–12202	B – 15
	F – 15
90430–14131	B – 12
90445–05ME6	F – 13
90445–08010	B – 15
90445–08023	D – 8
90445–08024	C – 2
90445–10141	G – 3
90445–11026	B – 14
90445–116H6	C – 2
90445–197J2	E – 12
90450–25037	B – 13
90450–32015	B – 11
90450–38040	B – 10
90450–52002	C – 2
90450–63001	B – 15
90462–05005	B – 15
90462–08017	F – 15
90464–07009	E – 11
90464–07209	F – 3
90464–07M56	F – 13
90464–08189	D – 10
90464–10233	D – 8
90464–12089	D – 3
90464–13073	F – 13
90464–13249	D – 3
	F – 13
90464–14001	F – 13
90464–15157	D – 8
90464–15195	F – 3
	G – 3
90464–16005	D – 15
90464–16007	D – 15
90464–18002	D – 5
	D – 10
90464–20005	G – 3
90464–20008	G – 4
90464–25002	G – 4
90464–25003	F – 14

CODIGO Nº	REF. Nº
90464–35132	F – 3
	G – 4
90465–08028	F – 15
90465–08034	C – 8
90465–08125	C – 8
90465–08380	F – 6
90465–10028	C – 6
90465–10098	C – 2
	F – 3
	F – 14
	G – 4
90465–14310	G – 3
90467–08075	D – 8
90467–09006	E – 2
90467–09037	C – 3
90467–090A0	E – 14
90467–090A1	E – 14
90467–10008	B – 14
90467–10038	B – 10
90467–11090	C – 3
90467–11106	C – 2
90467–12003	D – 15
90467–14015	C – 2
90467–17003	C – 2
90467–20086	C – 2
90468–08104	C – 2
90480–01558	D – 8
90480–10517	F – 10
90480–14323	F – 11
90480–15363	B – 10
90501–06022	C – 15
90501–064L1	C – 15
90501–104F9	B – 13
90501–15001	E – 13
90501–230E4	C – 11
90506–20008	E – 12
90506–20223	E – 14
90508–14012	C – 11
90508–20572	E – 12
90508–29016	C – 15
90508–32682	D – 2
91314–06016	B – 9
91314–06020	B – 8
	B – 9
	B – 12
	C – 7
91314–06025	B – 13
	C – 8

CODIGO Nº	REF. Nº
91314–06030	B – 9
	B – 12
	C – 9
91314–06035	B – 13
91314–06040	B – 12
	E – 13
91314–06045	B – 9
91314–06050	C – 8
91314–06060	B – 9
91314–08030	D – 12
91314–08040	D – 14
91317–04025	F – 14
91317–05010	E – 2
91317–05016	F – 13
91317–05035	E – 9
91317–06010	C – 8
91317–06012	F – 15
91317–06014	C – 8
91317–06016	B – 10
91317–06020	B – 15
	C – 8
91317–06025	B – 10
91317–06030	C – 8
91317–06045	C – 9
91317–06150	B – 2
91317–08025	D – 14
91380–05020	F – 13
91380–06010	C – 5
91380–06035	C – 9
91401–20012	E – 14
91401–25015	E – 12
91808–16023	B – 2
92014–06020	D – 5
92014–06025	E – 14
92014–08016	G – 3
92014–08030	E – 14
92017–05010	F – 13
92017–06010	D – 15
	E – 7
	E – 11
	G – 2
92017–06014	D – 6
92017–06016	E – 11
92017–06025	D – 15
92507–06014	C – 3
92902–04100	E – 10
92902–04600	E – 10
92904–06600	F – 13

CODIGO Nº	REF. Nº
92907–05600	B – 10
92907–08600	C – 11
92907–12600	D – 9
92990–05200	F – 13
92990–06600	E – 14
93101–12004	D – 2
93102–12106	C – 11
93102–40008	C – 14
93106–15034	C – 8
93106–28043	E – 4
93106–35042	E – 6
93106–40041	E – 6
93109–12075	C – 8
93109–17071	D – 9
93109–33049	D – 9
93210–07135	B – 14
93210–10096	B – 13
93210–12790	B – 13
93210–13657	B – 13
93210–14369	C – 9
93210–15566	B – 14
93210–18417	B – 10
93210–21190	B – 9
	B – 14
93210–29196	F – 15
93210–30660	B – 5
93210–32172	C – 9
93210–33133	B – 9
93210–357A2	B – 9
93210–49046	B – 11
93210–64297	B – 12
93306–00304	C – 11
93306–00420	E – 4
93306–07806	E – 6
93306–20455	C – 14
93306–20464	C – 13
93306–20644	E – 6
93306–30534	C – 13
93310–365B8	C – 12
93315–42523	D – 9
93315–42536	D – 9
93317–11096	C – 11
93317–11287	C – 11
93317–21288	C – 8
93317–21746	D – 9
93317–31771	D – 9
93399–99932	D – 12
93440–10109	B – 2

CODIGO Nº	REF. Nº
93440–25084	C – 13
93440–31183	C – 13
93440–45144	C – 14
93450–22146	B – 5
93501–04011	E – 13
93505–08030	B – 13
93900–00030	E – 4
	E – 6
94112–18019	E – 4
94116–17008	E – 6
94581–46118	E – 6
94591–40138	B – 8
94701–00241	B – 2
94701–00242	B – 2
95022–06020	B – 11
95024–06012	B – 9
	C – 5
95024–08012	B – 2
95024–08025	C – 5
95024–10040	B – 13
95027–06008	F – 15
95027–06010	B – 11
	B – 15
	D – 10
	E – 11
	E – 12
	G – 2
	G – 3
95027–06014	F – 15
95027–06016	D – 10
	E – 11
95027–06020	B – 2
	B – 12
	E – 14
	F – 12
95027–06025	B – 11
	B – 12
95027–06040	E – 11
95027–06090	D – 15
95027–08012	G – 3
95027–08025	G – 3
95027–08030	G – 3
95304–06700	D – 2
95307–06600	F – 11
95307–08600	E – 6
95307–08700	E – 14
95604–06200	E – 13
95607–05200	F – 15

INDICE NUMERICO

CODIGO Nº	REF. Nº
95607–06100	F – 12
95607–06200	F – 2
95607–08200	G – 3
95607–10200	D – 9
	E – 6
95607–14200	D – 11
95617–06100	E – 10
95617–08625	B – 2
95617–10100	D – 10
	D – 11
95707–05500	F – 11
95707–06500	E – 3
95707–08500	F – 3
95807–06012	F – 4
95807–06020	F – 4
95807–06025	B – 10
95807–06030	B – 10
	F – 14
95807–08016	D – 15
95814–06040	C – 6
95814–08050	C – 6
95814–08060	C – 6
95814–08070	C – 6
95817–06020	C – 6
95817–06025	C – 6
95817–06030	C – 6
95817–06045	C – 7
95817–06050	F – 7
95817–06055	C – 6
95817–06070	C – 6
95817–08025	F – 3
95817–08030	D – 3
95817–08065	C – 6
95817–08075	C – 6
95827–06010	G – 2
95827–06012	C – 14
95827–06014	B – 14
95827–06020	D – 2
95827–08035	D – 7
97007–05012	B – 10
97024–06016	F – 13
97706–04012	F – 8
97707–40012	E – 3
97707–40016	F – 9
97707–50012	D – 6
97707–50014	D – 6
97707–50016	F – 4
	F – 10

CODIGO Nº	REF. Nº
97707–50020	B – 15
	D – 5
97707–60020	D – 5
98502–04012	E – 10
98507–05010	C – 3
98507–05014	C – 3
98507–05020	F – 15
98507–05022	F – 12
98507–05030	C – 3
	F – 12
98507–05040	F – 12
98507–06008	F – 13
98507–06035	B – 12
98507–06045	B – 12
	C – 3
98707–03020	F – 12
98907–05012	B – 15
98907–05016	B – 15
99001–07600	C – 11
99001–10600	D – 2
99009–10400	C – 12
99009–11400	B – 12
99009–12400	B – 9
99009–19400	D – 2
99246–00080	D – 6
99247–00080	D – 6
99530–08012	B – 12
	C – 7
	C – 8
99530–08016	B – 13
	C – 7
99530–10114	C – 6
	C – 8
99530–14016	B – 4
	C – 6

CODIGO Nº	REF. Nº

CODIGO Nº	REF. Nº

CODIGO Nº	REF. Nº

CODIGO Nº	REF. Nº